EMC TEST REPORT

ETSI EN 301 489-1 V2.2.3 (2019-11)
ETSI EN 301 489-3 V2.1.1 (2019-03)
ETSI EN 301 489-17 V3.2.4 (2020-09)
ETSI EN 301 489-19 V2.1.1 (2019-04)
ETSI EN 301 489-52 V1.2.1 (2021-11)
EN 55032:2015+A1:2020
EN 55035:2017+A11:2020
EN IEC 61000-3-2:2019+A1:2021
EN 61000-3-3:2013+A2:2021

Product :	Mobile Phone
Trade Mark :	ulefone
Model Name :	GQ3117
Family Model :	Armor X13, Armor X13 Pro, Armor X13 Lite, Armor X13 Plus, Armor X13S, Armor X13P, Armor X13T, Armor X13E
Report No. :	S23060903402001

Prepared for

Shenzhen Gotron Electronic CO.,LTD.

7B01, Building A, Block 1, Anhongji Tianyao Plaza, Longhua District, Shenzhen City, Guangdong Province China

Prepared by

Shenzhen NTEK Testing Technology Co., Ltd.

1/F, Building E, Fenda Science Park, Sanwei Community,Xixiang Street Bao'an District, Shenzhen 518126 P.R. China

Tel. 400-800-6106, 0755-2320 0050, 0755-2320 0090

Website: http://www.ntek.org.cn

TEST RESULT CERTIFICATION

Applicant's Name..... : Shenzhen Gotron Electronic CO.,LTD.

Address ..... : 7B01, Building A, Block 1, Anhongji Tianyao Plaza, Longhua District, Shenzhen City, Guangdong Province China

Manufacturer's Name ..... : Shenzhen Gotron Electronic CO.,LTD.

Address ..... : 7B01, Building A, Block 1, Anhongji Tianyao Plaza, Longhua District, Shenzhen City, Guangdong Province China

Product description

Product name ..... : Mobile Phone

Trade Mark ..... : ulefone

Model Name ..... : GQ3117

Family Model ..... : Armor X13, Armor X13 Pro, Armor X13 Lite,Armor X13 Plus, Armor X13S, Armor X13P, Armor X13T, Armor X13E

Standards ..... : ETSI EN 301 489-1 V2.2.3 (2019-11)
ETSI EN 301 489-3 V2.1.1 (2019-03)
ETSI EN 301 489-17 V3.2.4 (2020-09)
ETSI EN 301 489-19 V2.1.1 (2019-04)
ETSI EN 301 489-52 V1.2.1 (2021-11)
EN 55032:2015+A1:2020; EN 55035:2017+A11:2020
EN IEC 61000-3-2:2019+A1:2021;EN 61000-3-3:2013+A2:2021

This device described above has been tested by NTEK, and the test results show that the equipment under test (EUT) is in compliance with the of article 3.1(b) of the Directive 2014/53/EU requirements. And it is applicable only to the tested sample identified in the report.

This report shall not be reproduced except in full, without the written approval of NTEK, this document may be altered or revised by NTEK, personnel only, and shall be noted in the revision of the document.

Test Sample Number .....: S230609034002

Date of Test.....

Date (s) of performance of tests .....: Jun 09, 2023 ~ Jul 12, 2023

Date of Issue.....: Jul 12, 2023

Test Result.....: Pass

Testing Engineer : Allen Huang
(Allen Huang)

Authorized Signatory : Alex
(Alex Li)

NTEK Testing Technology Co., Ltd. Shenzhen NTEK Report Seal

Table of Contents **Page**

2 TEST FACILITY 7
3 MEASUREMENT UNCERTAINTY 7
1 . GENERAL INFORMATION 9
1.1 GENERAL DESCRIPTION OF EUT 9
1.2 DESCRIPTION OF TEST MODES 11
1.3 DESCRIPTION OF TEST SETUP 13
1.4 DESCRIPTION TEST PERIPHERAL AND EUT PERIPHERAL 14
1.5 MEASUREMENT INSTRUMENTS LIST 15
2 . EMC EMISSION TEST 19
2.1 CONDUCTED EMISSION MEASUREMENT 19
2.1.1 POWER LINE CONDUCTED EMISSION 19
2.1.2 TELECOMMUNICATION PORT CONDUCTED EMISSION(VOLTAGE LIMITS) 20
2.1.3 TEST PROCEDURE 22
2.1.4 TEST SETUP 22
2.1.5 EUT OPERATING CONDITIONS 22
2.1.6 TEST RESULTS 23
2.2 RADIATED EMISSION MEASUREMENT 25
2.2.1 LIMITS OF RADIATED EMISSION MEASUREMENT 25
2.2.2 LIMITS OF RADIATED EMISSION MEASUREMENT 26
2.2.3 TEST PROCEDURE 27
2.2.4 TEST SETUP 27
2.2.5 EUT OPERATING CONDITIONS 28
2.2.6 TEST RESULTS (30-1000MHz) 29
2.2.7 TEST RESULTS(1000-6000MHz) 31
2.3 HARMONICS CURRENT 32
2.3.1 LIMITS OF HARMONICS CURRENT 32
3.3.2 TEST PROCEDURE 33
3.3.3 EUT OPERATING CONDITIONS 33
3.3.4 TEST SETUP 33
3.3.5 TEST RESULTS 34
2.4 VOLTAGE FLUCTUATION AND FLICKERS 35
2.4.1 LIMITS OF VOLTAGE FLUCTUATION AND FLICKERS 35
3.4.2 TEST PROCEDURE 35
3.4.3 EUT OPERATING CONDITIONS 35
3.4.4 TEST SETUP 36
3.4.5 TEST RESULTS 37
3 . EMC IMMUNITY TEST 38

Table of Contents **Page**

3.1 GENERAL PERFORMANCE CRITERIA 38
3.1.1 PERFORMANCE CRITERIA 38
3.2 GENERAL PERFORMANCE CRITERIA TEST SETUP 42
3.3 ESD TESTING 43
3.3.1 TEST SPECIFICATION 43
3.3.2 TEST PROCEDURE 43
3.3.3 TEST SETUP 44
3.3.4 TEST RESULTS 45
3.3.5 PHOTO(S) SHOWN THE LOCATION(S) OF ESD EVALUATED 48
3.4 RS TESTING 49
3.4.1 TEST SPECIFICATION 49
3.4.2 TEST PROCEDURE 49
3.4.3 TEST SETUP 50
3.4.4 TEST RESULTS 51
3.5 EFT/BURST TESTING 55
3.5.1 TEST SPECIFICATION 55
3.5.2 TEST PROCEDURE 55
3.5.3 TEST SETUP 56
3.5.4 TEST RESULTS 57
3.6 SURGE TESTING 59
3.6.1 TEST SPECIFICATION 59
3.6.2 TEST PROCEDURE 59
3.6.3 TEST SETUP 60
3.6.4 TEST RESULTS 61
3.7 INJECTION CURRENT TESTING 63
3.7.1 TEST SPECIFICATION 63
3.7.2 TEST PROCEDURE 63
3.7.3 TEST SETUP 63
3.7.4 TEST RESULTS 65
4.8 VOLTAGE INTERRUPTION/DIPS TESTING 68
4.8.1 TEST SPECIFICATION 68
4.8.2 TEST PROCEDURE 68
4.8.3 TEST SETUP 68
4.8.4 TEST RESULTS 69
4 . EUT TEST PHOTO 70

1. TEST SUMMARY

Test procedures according to the technical standards:

ETSI EN 301 489-1 V2.2.3 (2019-11)
ETSI EN 301 489-3 V2.1.1 (2019-03)
ETSI EN 301 489-17 V3.2.4 (2020-09)
ETSI EN 301 489-19 V2.1.1 (2019-04)
ETSI EN 301 489-52 V1.2.1 (2021-11)
EN 55032:2015+A1:2020; EN 55035:2017+A11:2020
EN IEC 61000-3-2:2019+A1:2021;EN 61000-3-3:2013+A2:2021

EMC Emission

Standard	Test Item	Limit	Judgment	Remark
EN 55032:2015+A1: 2020	Conducted Emission On AC And Telecom Port 150kHz to 30MHz	Class B	PASS	
	Disturbance Voltage at The Antenna Terminals (30MHz To 2150MHz)	------	N/A	
	Wanted signal and disturbance voltage at the RF output terminals (30MHz To 2150MHz)	------	N/A	
	Radiated Emission 30MHz to 1000MHz	Class B	PASS	
	Radiated Emission 1GHz to 6GHz	Class B	PASS	
EN IEC 61000-3-2:2019+A1: 2021	Harmonic Current Emission	Class A	N/A	NOTE (1)
EN 61000-3-3:2013+A2: 2021	Voltage Fluctuations & Flicker	------	PASS	

EMC Immunity

Section EN 55035:2017+A11:2020	Test Item	Performance Criteria	Judgment	Remark
EN 61000-4-2:2009	Electrostatic Discharge	B	PASS	
EN 61000-4-3:2006+ A1:2008+A2:2010	RF electromagnetic field	A	PASS	
EN 61000-4-4:2012	Fast transients	B	PASS	
EN 61000-4-5:2014+ A1:2017	Surges	B	PASS	
EN 61000-4-6:2014	Continuous radio frequency disturbances or Injected Current	A	PASS	
EN 61000-4-8:2010	Power Frequency Magnetic Field	A	N/A	NOTE (3)
EN 61000-4-11:2004	Volt. Interruptions Volt. Dips	B / C / C **NOTE (2)**	PASS	

NOTE:
(1)" N/A" denotes test is not applicable in this Test Report
(2) Voltage dip: 100% reduction – Performance Criteria **B**
Voltage dip: 30% reduction – Performance Criteria **C**
Voltage Interruption: 100% Interruption – Performance Criteria **C**
(3) Applicable only to equipment containing devices intrinsically susceptible to magnetic fields, such as CRT monitors, Hall effect elements, electro-dynamic microphones, magnetic field sensors or audio frequency transformers.
(4) For client's request and manual description, the test will not be executed.

2 TEST FACILITY

Shenzhen NTEK Testing Technology Co., Ltd.

Add. : 1/F, Building E, Fenda Science Park, Sanwei Community, Xixiang Street Bao'an District, Shenzhen 518126 P.R. China

CNAS-Lab.	:	The Certificate Registration Number is L5516
IC-Registration	:	The Certificate Registration Number is CN0074
FCC- Accredited	:	Test Firm Registration Number: 463705 Designation Number: CN1184
A2LA-Lab.	:	The Certificate Registration Number is 4298.01 This laboratory is accredited in accordance with the recognized International Standard ISO/IEC 17025:2005 General requirements for the competence of testing and calibration laboratories. This accreditation demonstrates technical competence for a defined scope and the operation of a laboratory quality management system (refer to joint ISO-ILAC-IAF Communiqué dated 8 January 2009).

3 MEASUREMENT UNCERTAINTY

The reported uncertainty of measurement **y** ± **U**, where expended uncertainty **U** is based on a standard uncertainty multiplied by a coverage factor of **k=2**, providing a level of confidence of approximately **95** %.

Test Item	Measurement Frequency Range	K	U(dB)
AC Mains Conducted Emission	0.009kHz ~ 0.15MHz	2	2.66
AC Mains Conducted Emission	0.15MH ~ 30MHz	2	2.80
Telecom Conducted Emission (Cat 3)	0.15MHz ~ 30MHz	2	2.40
Telecom Conducted Emission (Cat 5)	0.15MHz ~ 30MHz	2	2.58
Radiated Emission	30MHz ~ 1000MHz	2	2.64
Radiated Emission	1000MHz ~ 6000MHz	2	2.40
Radiated Emission	6000MHz ~ 18000MHz	2	2.52

Revision History

Report No.	Version	Description	Issued Date
S23060903402001	Rev.01	Initial issue of report	Jul 12, 2023

1. GENERAL INFORMATION

1.1 GENERAL DESCRIPTION OF EUT

Equipment	Mobile Phone
Trade Mark	ulefone
Model Name	GQ3117
Family Model	Armor X13, Armor X13 Pro, Armor X13 Lite,Armor X13 Plus, Armor X13S, Armor X13P, Armor X13T, Armor X13E
Model Difference	All the model are the same circuit and RF module, except the model names.
Frequency Bands:	☒BT: 2402~2480 MHz ☒2.4G WIFI: 802.11b/g/n(20MHz): 2412~2472MHz 802.11n(40MHz):2422~2462MHz ☒5G WIFI: 802.11a/ n(20/40)/ ac(20/40/80): 5180MHz~5240MHz;(20MHz) 5190MHz~5230MHz;(40MHz) 5210MHz;(80MHz) 5745-5825 MHz for 802.11a/n20/ac20; 5755-5795 MHz for 802.11n40/ac40; 5775MHz for 802.11 ac80; ☒GSM/GPRS/EGPRS 900: 880~915MHz(TX) 925~960MHz (Rx) ☒GSM/GPRS/EGPRS 1800: 1710~1785MHz(TX) 1805~1880MHz(Rx) ☒WCDMA Band I: 1920 MHz ~1980 MHz(TX); 2110 MHz~2170 MHz(RX) WCDMA Band Ⅷ: 880~915MHz(TX); 925~960MHz(RX) ☒ E-UTRA FDD I, III, VII, VIII, XX, XXVIII E-UTRA TDD XL FDD Band I: Uplink: 1920 MHz to 1980MHz Downlink: 2110 MHz to 2170 MHz FDD Band III: Uplink:1710 MHz to 1785 MHz Downlink: 1805 MHz to 1880 MHz FDD Band VII: Uplink: 2500 MHz to 2570 MHz Downlink: 2620 MHz to 2690 MHz FDD Band VIII: Uplink: 880MHz to 915 MHz Downlink: 925 MHz to 960 MHz FDD Band XX: Uplink: 832 MHz to 862 MHz Downlink: 791 MHz to 821 MHz FDD Band XXVIII: Uplink: 703 MHz to 748MHz Downlink: 758 MHz to 803 MHz TDD Band XL: Uplink & Downlink: 2300 MHz to 2400 MHz ☒FM Receiver: 87.5 MHz to 108 MHz ☒GPS: 1.57542GHz ☒NFC: 13.56 MHz;

Modulation Mode:	☒BT(1Mbps)/BLE: GFSK ☒BT EDR(2Mbps): π/4-DQPSK ☒BT EDR(3Mbps): 8-DPSK ☒BLE(2Mbps): GFSK ☒IEEE 802.11b : DSSS (CCK, DQPSK, DBPSK) ☒IEEE 802.11g/n (HT20/HT40) : OFDM (64QAM, 16QAM, QPSK, BPSK) ☒802.11a:OFDM (BPSK / QPSK / 16QAM) ☒802.11n:OFDM (QPSK/BPSK/16QAM/64QAM) ☒802.11ac:OFDM (QPSK/BPSK/16QAM/64QAM/256QAM) ☒GSM/GPRS/EGPRS: GMSK, 8PSK ☒WCDMA(Voice /HSDPA/HSUPA): QPSK ☒LTE: QPSK, 16QAM ☒GPS: BPSK modulation ☒FM Receiver: FM; ☒NFC: ASK
Adapter	Model: HJ-0502000W2-EU Input: 100-240V~50/60Hz 0.3A Output: 5.0V⎓2.0A
Battery	DC 3.85V, 6320mAh, 24.332Wh
Rating	DC 3.85V from battery or DC 5V from adapter
Connecting I/O Port(s)	Please refer to the User's Manual
Antenna:	BT/WIFI/GPS: PIFA Antenna; GSM/WCDMA/LTE: PIFA Antenna; FM: PIFA Antenna; NFC: Induction coil Antenna
Hard Ware Version	P1_02
Soft Ware Version	Armor X13_SH1_EEA_V10

1.2 DESCRIPTION OF TEST MODES

To investigate the maximum EMI emission characteristics generates from EUT, the test system was pre-scanning tested base on the consideration of following EUT operation mode or test configuration mode which possible have effect on EMI emission level. Each of these EUT operation mode(s) or test configuration mode(s) mentioned above was evaluated respectively.

Pretest Mode	Description
Mode 1	Charging + REC(Rear / Front)
Mode 2	Charging + TF Playing
Mode 3	Data transmission
Mode 4	Charging + FM(87.6MHz / 98MHz / 107.9MHz)
Mode 5	BT Link mode
Mode 6	2.4G Wi-Fi / 5.2G Wi-Fi / 5.8G Wi-Fi
Mode 7	GSM / GPRS / EGPRS 900 / 1800
Mode 8	WCDMA / HSDPA / HSUPA B1 / B8
Mode 9	LTE Band 1 / 3 / 7 / 8 / 20 / 28 / 40
Mode 10	GPS Receiver
Mode 11	NFC

For Conducted Test	
Final Test Mode	Description
Mode 1	Charging + REC(Rear)

For Radiated Test	
Final Test Mode	Description
Mode 1	Charging + REC(Rear)

For EMS Test	
Pretest Mode	Description
Mode 1	Charging + REC(Rear / Front)
Mode 2	Charging + TF Playing
Mode 3	Data transmission
Mode 4	Charging + FM(87.6MHz / 98MHz / 107.9MHz)
Mode 5	BT Link mode
Mode 6	2.4G Wi-Fi / 5.2G Wi-Fi / 5.8G Wi-Fi
Mode 7	GSM / GPRS / EGPRS 900 / 1800
Mode 8	WCDMA / HSDPA / HSUPA B1 / B8
Mode 9	LTE Band 1 / 3 / 7 / 8 / 20 / 28 / 40
Mode 10	GPS Receiver
Mode 11	NFC

NOTE: The test modes were carried out for all operation modes. The final test mode of the EUT was the worst test mode for EMI, and its test data was showed.

1.3 DESCRIPTION OF TEST SETUP

CE

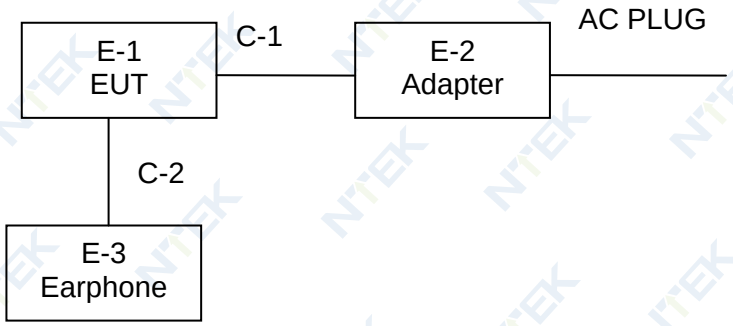

RE

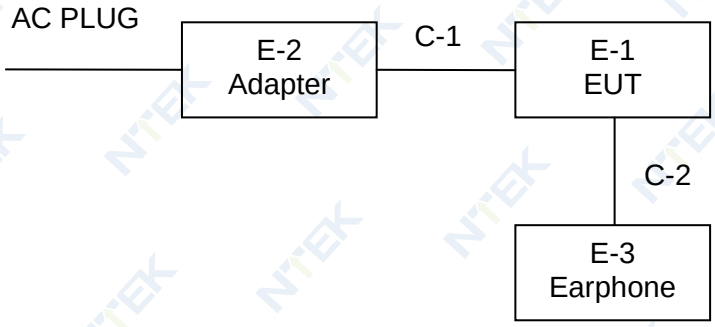

1.4 DESCRIPTION TEST PERIPHERAL AND EUT PERIPHERAL

The EUT has been tested as an independent unit together with other necessary accessories or support units. The following support units or accessories were used to form a representative test configuration during the tests.

Item	Equipment	Model/Type No.	Series No.	Note
E-1	Mobile Phone	GQ3117	N/A	EUT
E-2	Adapter	HJ-0502000W2-EU	N/A	Peripherals
E-3	Earphone	N/A	N/A	Peripherals

Item	Cable Type	Shielded Type	Ferrite Core	Length	Note
C-1	USB Cable	YES	NO	1.0m	
C-2	Eaphone Cable	NO	NO	1.2m	

Note:

(1) The support equipment was authorized by Declaration of Confirmation.

(2) For detachable type I/O cable should be specified the length in cm in『Length』column.

1.5 MEASUREMENT INSTRUMENTS LIST

1.5.1 CONDUCTED EMISSION

Item	Kind of Equipment	Manufacturer	Type No.	Serial No.	Last calibration	Calibrated until	Calibration period
1	Test Cable	N/A	C01	N/A	2023.05.06	2026.05.05	3 years
2	Test Cable	N/A	C02	N/A	2023.05.06	2026.05.05	3 years
3	Test Cable	N/A	C03	N/A	2023.05.06	2026.05.05	3 years
4	Pulse Limiter	SCHWARZBECK	VTSD 9561F	9716	2022.06.17	2025.06.16	3 year
5	50Ω Switch	ANRITSU CORP	MP59B	6200983704	2023.05.06	2026.05.05	3 year
6	EMI Test Receiver	R&S	ESCI	101160	2023.03.27	2024.03.26	1 year
7	Unversal radio communication tester	R&S	CMU200	1100.008.02	2023.05.29	2024.05.28	1 year
8	Wideband Radio Communication Tester Specifications	R&S	CMW500	148500	2023.05.29	2024.05.28	1 year
9	LISN	SCHWARZBECK	NNLK 8129	8129245	2023.03.27	2024.03.26	1 year
10	LISN	R&S	ENV216	101313	2023.03.27	2024.03.26	1 year

1.5.2 RADIATED TEST SITE

Item	Kind of Equipment	Manufacturer	Type No.	Serial No.	Last calibration	Calibrated until	Calibration period
1	Antenna Mast	EM	SC100_1	N/A	N/A	N/A	N/A
2	Turn Table	EM	SC100	060531	N/A	N/A	N/A
3	EMI Test Receiver	R&S	ESCI-7	101318	2023.03.27	2024.03.26	1 year
4	50Ω Switch	Anritsu Corp	MP59B	6200983705	2023.05.06	2026.05.05	3 year
5	Spectrum Analyzer	Aglient	E4440A	MY41000130	2023.03.27	2024.03.26	1 year
6	Unversal radio communication tester	R&S	CMU200	1100.008.02	2023.05.29	2024.05.28	1 year
7	Wideband Radio Communication Tester Specifications	R&S	CMW500	148500	2023.05.29	2024.05.28	1 year
8	Test Cable	N/A	R-01	N/A	2022.06.17	2025.06.16	3 years
9	Test Cable	N/A	R-02	N/A	2022.06.17	2025.06.16	3 years
10	Bilog Antenna	TESEQ	CBL6111D	31216	2023.03.16	2024.03.15	1 year
11	Horn Antenna	SCHWARZBECK	BBHA 9120 D	2816	2023.01.12	2024.01.11	1 year
12	Amplifier	EMC	EMC051835SE	980246	2023.05.29	2024.05.28	1 year

1.5.3 HARMONICS AND FILCK

Item	Kind of Equipment	Manufacturer	Type No.	Serial No.	Last calibration	Calibrated until	Calibration period
1	Harmonic & Flicker	EM TEST	DPA500	0303-04	2023.03.27	2024.03.26	1 year
2	AC Power Source	EM TEST	ACS500	0203-01	2023.03.28	2024.03.27	1 year
3	Unversal radio communication tester	R&S	CMU200	1100.008.02	2023.05.29	2024.05.28	1 year
4	Wideband Radio Communication Tester Specifications	R&S	CMW500	148500	2023.05.29	2024.05.28	1 year

1.5.4 ESD

Item	Kind of Equipment	Manufacturer	Type No.	Serial No.	Last calibration	Calibrated until	Calibration period
1	Unversal radio communication tester	R&S	CMU200	1100.008.02	2023.05.29	2024.05.28	1 year
2	Wideband Radio Communication Tester Specifications	R&S	CMW500	148500	2023.05.29	2024.05.28	1 year
3	Electrostatic Discharge Generator	Lioncel	ESD-203B	ESD203B0150402	2023.05.29	2024.05.28	1 year

1.5.5 RS

Item	Kind of Equipment	Manufacturer	Type No.	Serial No.	Last calibration	Calibrated until	Calibration period
1	Unversal radio communication tester	R&S	CMU200	1100.008.02	2023.05.29	2024.05.28	1 year
2	Wideband Radio Communication Tester Specifications	R&S	CMW500	148500	2023.05.29	2024.05.28	1 year
3	Audio Power Amplifier	Brüel & Kjær	4602B	2185667	2023.05.29	2024.05.28	1 year
4	Mouth Simulator	Brüel & Kjær	2669	2143265	2023.05.29	2024.05.28	1 year
5	Sound Calibrator	Brüel & Kjær	4185	2194825	2023.05.29	2024.05.28	1 year
6	1/2” Pressure-field Microphone	Brüel & Kjær	735	2641678	2023.05.29	2024.05.28	1 year
7	Telephone Test Head	Brüel & Kjær	4185	2631728	2023.05.29	2024.05.28	1 year
8	Audio Analyzer	R&S	UPV	100419	2023.05.29	2024.05.28	1 year

9	Ear Simulator for Telephonometry	Brüel & Kjær	4185	2553612	2023.03.27	2024.03.26	1 year
10	Bilog Antenna	ETS	3142E(Fequency range 30MHz to 6 GHz)	00214344	2022.11.04	2023.11.03	1 year
11	Broadband Amplifier	AR	60S1G6	0350414	2023.03.21	2024.03.20	1 year
12	MXG Vector Signal Generator	Agilent	N5182A	MY47070317	2023.05.29	2024.05.28	1 year
13	Power Amplifier	rflight	NTWPA-00810200	17063153	2023.05.29	2024.05.28	1 year
14	Power Amplifier	AR	25S1G4A	308598	2023.05.29	2024.05.28	1 year
15	Power Meter	Agilent	E4419B	MY45102538	2023.05.29	2024.05.28	1 year
16	Power Sensor	Agilent	E9301A	MY41495644	2023.05.29	2024.05.28	1 year
17	Power Sensor	Agilent	E9301A	US39212148	2023.05.29	2024.05.28	1 year

1.5.6 SURGE, EFT/BURST, VOLTAGE INTERRUPTION/DIPS

Item	Kind of Equipment	Manufacturer	Type No.	Serial No.	Last calibration	Calibrated until	Calibration period
1	Surge Generator	EVERFINE	EMS61000-5A-V1	1101002	2022.07.27	2023.07.26	1 year
2	DIPS Generator	EVERFINE	EMS61000-11K	1011002	2022.07.27	2023.07.26	1 year
3	EFT/B Generator	EVERFINE	EMS61000-4A-V2	1012005	2023.03.27	2024.03.26	1 year
4	Unversal radio communication tester	R&S	CMU200	1100.008.02	2023.05.29	2024.05.28	1 year
5	Wideband Radio Communication Tester Specifications	R&S	CMW500	148500	2023.05.29	2024.05.28	1 year

1.5.7 INJECTION CURRENT

Item	Kind of Equipment	Manufacturer	Type No.	Serial No.	Last calibration	Calibrated until	Calibration period
1	Attenuator	TESEQ	ATN 6075	38411	N/A	N/A	N/A
2	RF Cable	TESEQ	RF Cable	N/A	N/A	N/A	N/A
3	Signal Generator	R&S	SML03	100954	2022.11.01	2023.10.31	1 year
4	Power Amplifier	TESEQ	CBA 230M-080	T44376	2022.09.01	2023.08.31	1 year
5	EM Clamp	FCC	F-203I-23MM	504	2022.11.01	2023.10.31	1 year
6	Audio Power Amplifier	Brüel & Kjær	4602B	2185667	2023.03.27	2024.03.26	1 year

7	Mouth Simulator	Brüel & Kjær	2669	2143265	2022.11.01	2023.10.31	1 year
8	Sound Calibrator	Brüel & Kjær	4185	2194825	2022.11.01	2023.10.31	1 year
9	1/2” Pressure-field Microphone	Brüel & Kjær	735	2641678	2022.11.01	2023.10.31	1 year
10	Audio Analyzer	R&S	UPV	100419	2022.11.01	2023.10.31	1 year
11	Ear Simulator for Telephonometry	Brüel & Kjær	4185	2553612	2023.05.29	2024.05.28	1 year
12	Telephone Test Head	Brüel & Kjær	4185	2631728	2023.05.29	2024.05.28	1 year
13	Unversal radio communication tester	R&S	CMU200	1100.008.02	2023.05.29	2024.05.28	1 year
14	Wideband Radio Communication Tester Specifications	R&S	CMW500	148500	2023.05.29	2024.05.28	1 year
15	Coupling and Decoupling Network	TESEQ	CDN M016	38722	2023.05.29	2024.05.28	1 year

2. EMC EMISSION TEST

2.1 CONDUCTED EMISSION MEASUREMENT

2.1.1 POWER LINE CONDUCTED EMISSION (Frequency Range 150kHz-30MHz)

Table A.8 – Requirements for conducted emissions from the AC mains power ports of Class A equipment

Applicable to 1. AC mains power ports (3.1.1)				
Table clause	**Frequency range** MHz	**Coupling device** (see Table A.7)	**Detector type / bandwidth**	**Class A limits dB(μV)**
A8.1	0,15 – 0,5	AMN	Quasi Peak / 9 kHz	79
	0,5 – 30			73
A8.2	0,15 – 0,5	AMN	Average / 9 kHz	66
	0,5 – 30			60
Apply A8.1 and A8.2 across the entire frequency range.				

Table A.9 – Requirements for conducted emissions from the AC mains power ports of Class B equipment

Applicable to 1. AC mains power ports (3.1.1)				
Table clause	**Frequency range** MHz	**Coupling device** (see Table A.7)	**Detector type / bandwidth**	**Class B limits dB(μV)**
A9.1	0,15 – 0,5	AMN	Quasi Peak / 9 kHz	66 – 56
	0,5 – 5			56
	5 – 30			60
A9.2	0,15 – 0,5	AMN	Average / 9 kHz	56 – 46
	0,5 – 5			46
	5 – 30			50
Apply A9.1 and A9.2 across the entire frequency range.				

Note:

(1) The tighter limit applies at the band edges.

(2) The limit of " * " marked band means the limitation decreases linearly with the logarithm of the frequency in the range.

2.1.2 TELECOMMUNICATION PORT CONDUCTED EMISSION(VOLTAGE LIMITS)

(Frequency Range 150kHz-30MHz)

Table A.10 – Requirements for asymmetric mode conducted emissions from Class A equipment

Applicable to

1. wired network ports (3.1.30)
2. optical fibre ports (3.1.24) with metallic shield or tension members
3. antenna ports (3.1.3)

Table clause	Frequency range MHz	Coupling device (see Table A.7)	Detector type / bandwidth	Class A voltage limits dB(µV)	Class A current limits dB(µA)
A10.1	0,15 – 0,5	AAN	Quasi Peak / 9 kHz	97 – 87	n/a
	0,5 – 30			87	
	0,15 – 0,5	AAN	Average / 9 kHz	84 – 74	
	0,5 – 30			74	
A10.2	0,15 – 0,5	CVP and current probe	Quasi Peak / 9 kHz	97 – 87	53 – 43
	0,5 – 30			87	43
	0,15 – 0,5	CVP and current probe	Average / 9 kHz	84 – 74	40 – 30
	0,5 – 30			74	30
A10.3	0,15 – 0,5	Current Probe	Quasi Peak / 9 kHz	n/a	53 – 43
	0,5 – 30				43
	0,15 – 0,5	Current Probe	Average / 9 kHz		40 – 30
	0,5 – 30				30

The choice of coupling device and measurement procedure is defined in Annex C.

AC mains ports that also have the function of a wired network port shall meet the limits given in Table A.8.

The test shall cover the entire frequency range.

The application of the voltage and/or current limits is dependent on the measurement procedure used. Refer to Table C.1 for applicability.

Testing is required at only one EUT supply voltage and frequency.

Applicable to ports listed above and intended to connect to cables longer than 3 m.

Table A.12 – Requirements for conducted differential voltage emissions from Class B equipment

Applicable to
1. TV broadcast receiver tuner ports (3.1.8) with an accessible connector
2. RF modulator output ports (3.1.27)
3. FM broadcast receiver tuner ports (3.1.8) with an accessible connector

Table clause	Frequency range MHz	Detector type/ bandwidth	Class B limits dB(µV) 75 Ω			Applicability
			Other	Local Oscillator Fundamental	Local Oscillator Harmonics	
A12.1	30 – 950	For frequencies ≤1 GHz Quasi Peak/ 120 kHz	46	46	46	See a)
	950 – 2 150		46	54	54	
A12.2	950 – 2 150		46	54	54	See b)
A12.3	30 – 300		46	54	50	See c)
	300 – 1 000				52	
A12.4	30 – 300	For frequencies ≥1 GHz Peak/ 1 MHz	46	66	59	See d)
	300 – 1 000				52	
A12.5	30 – 950		46	76	46	See e)
	950 – 2 150			n/a	54	

a) Television receivers (analogue or digital), video recorders and PC TV broadcast receiver tuner cards working in channels between 30 MHz and 1 GHz, and digital audio receivers.

b) Tuner units (not the LNB) for satellite signal reception.

c) Frequency modulation audio receivers and PC tuner cards.

d) Frequency modulation car radios.

e) Applicable to EUTs with RF modulator output ports (for example DVD equipment, video recorders, camcorders and decoders etc.) designed to connect to TV broadcast receiver tuner ports.

Testing is required at only one EUT supply voltage and frequency.

The term 'other' refers to all emissions other than the fundamental and the harmonics of the local oscillator.

The test shall be performed with the device operating at each reception channel.

The test shall cover the entire frequency range.

The following table is the setting of the receiver

Receiver Parameters	Setting
Attenuation	10 dB
Start Frequency	0.15 MHz
Stop Frequency	30 MHz
IF Bandwidth	9 kHz

2.1.3 TEST PROCEDURE

a. The EUT was placed 0.8 meters from the horizontal ground plane with EUT being connected to the power mains through a line impedance stabilization network (LISN). All other support equipments powered from additional LISN(s). The LISN provide 50 Ohm/ 50uH of coupling impedance for the measuring instrument.
b. Interconnecting cables that hang closer than 40 cm to the ground plane shall be folded back and forth in the center forming a bundle 30 to 40 cm long.
c. I/O cables that are not connected to a peripheral shall be bundled in the center. The end of the cable may be terminated, if required, using the correct terminating impedance. The overall length shall not exceed 1 m.
d. LISN at least 80 cm from nearest part of EUT chassis.
e. For the actual test configuration, please refer to the related Item –EUT Test Photos.

2.1.4 TEST SETUP

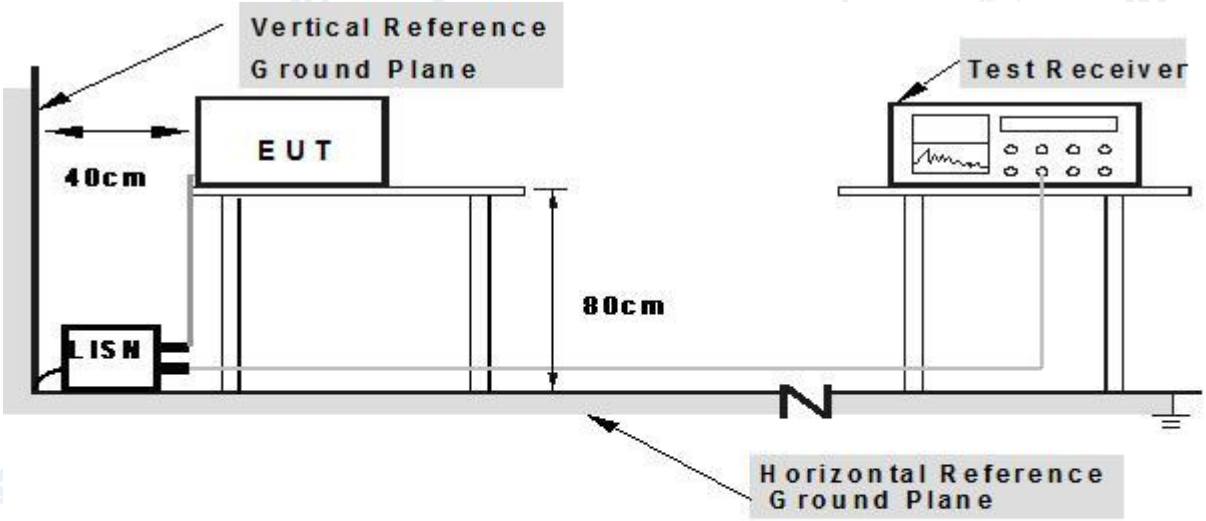

Note: 1.Support units were connected to second LISN.
2.Both of LISNs (AMN) are 80 cm from EUT and at least 80 from other units and other metal planes

2.1.5 EUT OPERATING CONDITIONS

The EUT tested system was configured as the statements of 2.2 Unless otherwise a special operating condition is specified in the follows during the testing.

2.1.6 TEST RESULTS

EUT:	Mobile Phone	Model Name:	GQ3117
Temperature:	24.7℃	Relative Humidity:	53%
Pressure:	1010hPa	Phase:	L
Test Voltage:	DC 5V from Adapter AC 230V/50Hz	Test Mode:	Mode 1

Frequency (MHz)	Meter Reading (dBμV)	Factor (dB)	Emission Level (dBμV)	Limits (dBμV)	Margin (dB)	Remark
0.1900	46.25	10.01	56.26	64.04	-7.78	QP
0.1900	23.15	10.01	33.16	54.04	-20.88	AVG
0.2260	39.15	10.10	49.25	62.60	-13.35	QP
0.2260	22.70	10.10	32.80	52.60	-19.80	AVG
0.7180	36.31	11.09	47.40	56.00	-8.60	QP
0.7180	26.24	11.09	37.33	46.00	-8.67	AVG
1.2460	32.08	12.16	44.24	56.00	-11.76	QP
1.2460	21.86	12.16	34.02	46.00	-11.98	AVG
2.0579	31.02	9.66	40.68	56.00	-15.32	QP
2.0579	21.16	9.66	30.82	46.00	-15.18	AVG
19.9619	42.23	9.72	51.95	60.00	-8.05	QP
19.9619	24.31	9.72	34.03	50.00	-15.97	AVG

Remark:
1. All readings are Quasi-Peak and Average values.
2. Factor = Insertion Loss + Cable Loss.

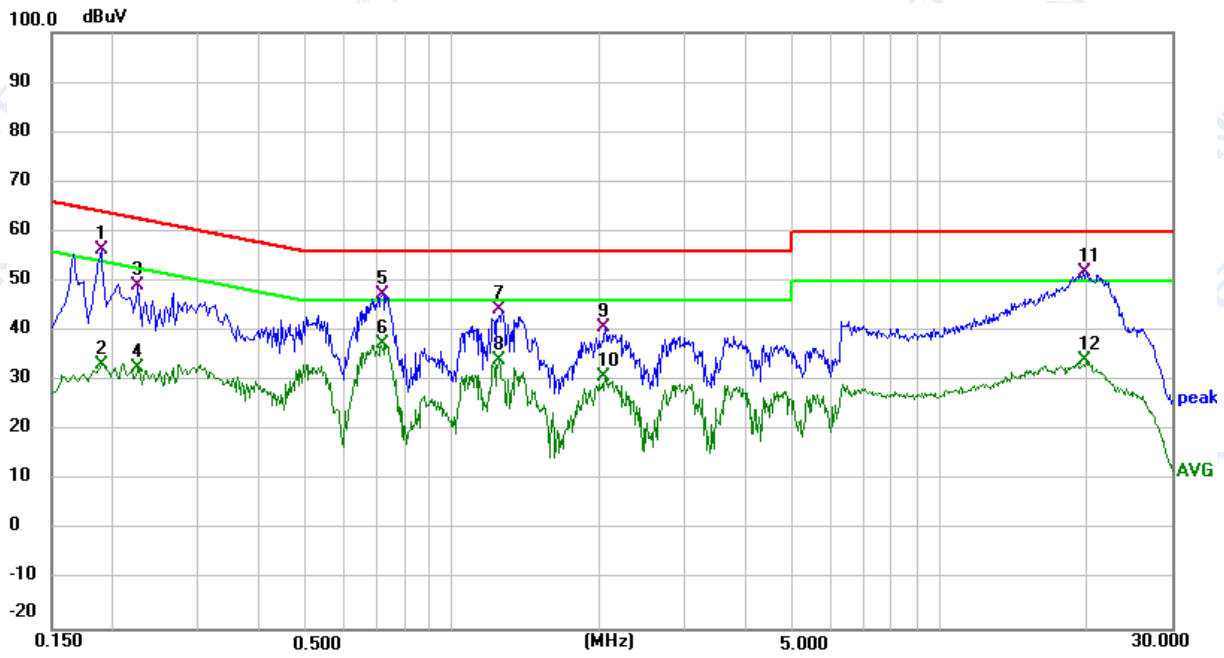

EUT:	Mobile Phone	Model Name:	GQ3117
Temperature:	21.1℃	Relative Humidity:	50%
Pressure:	1010hPa	Phase:	N
Test Voltage:	DC 5V from Adapter AC 230V/50Hz	Test Mode:	Mode 1

Frequency (MHz)	Meter Reading (dBμV)	Factor (dB)	Emission Level (dBμV)	Limits (dBμV)	Margin (dB)	Remark
0.1819	47.22	9.99	57.21	64.40	-7.19	QP
0.1819	18.99	9.99	28.98	54.40	-25.42	AVG
0.2180	43.65	10.08	53.73	62.89	-9.16	QP
0.2180	18.34	10.08	28.42	52.89	-24.47	AVG
0.6860	37.77	11.03	48.80	56.00	-7.20	QP
0.6860	25.65	11.03	36.68	46.00	-9.32	AVG
0.7539	35.74	11.16	46.90	56.00	-9.10	QP
0.7539	23.15	11.16	34.31	46.00	-11.69	AVG
1.0300	35.71	11.72	47.43	56.00	-8.57	QP
1.0300	17.97	11.72	29.69	46.00	-16.31	AVG
19.9180	38.62	9.72	48.34	60.00	-11.66	QP
19.9180	19.76	9.72	29.48	50.00	-20.52	AVG

Remark:
1. All readings are Quasi-Peak and Average values.
2. Factor = Insertion Loss + Cable Loss.

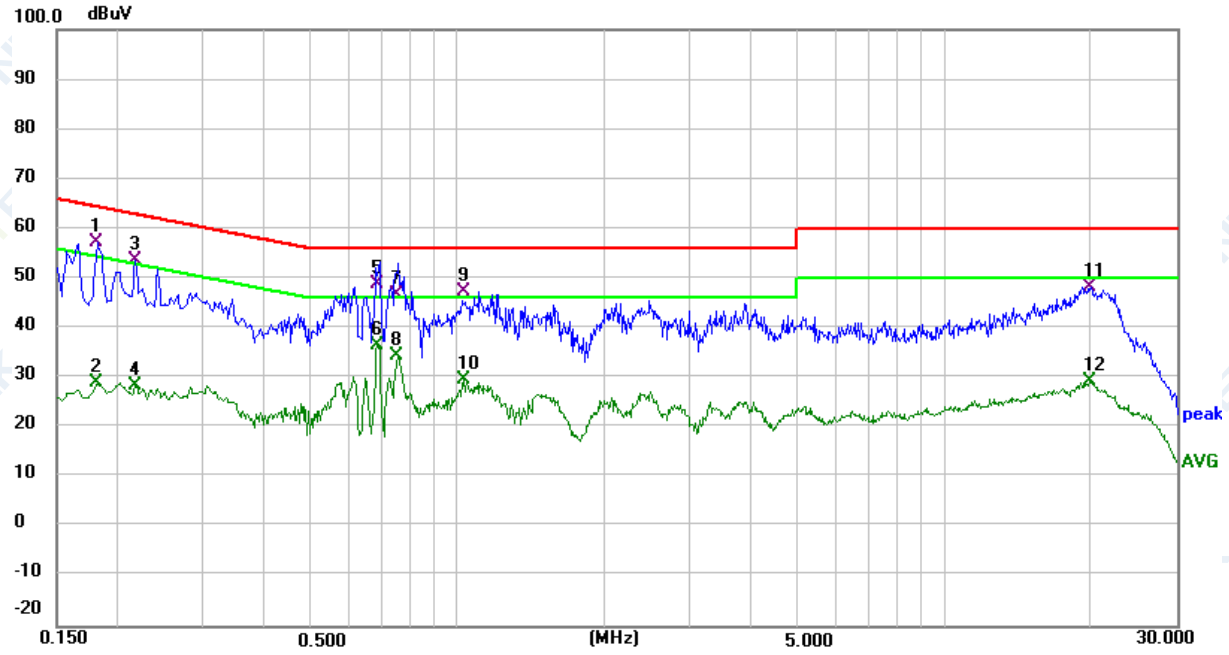

Note: The test modes were carried out for all operation modes. The worst test mode for test data was showed in the report.

2.2 RADIATED EMISSION MEASUREMENT

2.2.1 LIMITS OF RADIATED EMISSION MEASUREMENT (Below 1000MHz)

Table A.2 – Requirements for radiated emissions at frequencies up to 1 GHz for Class A equipment

Table clause	Frequency range MHz	Measurement		Class A limits dB(μV/m)
		Distance m	Detector type/ bandwidth	OATS/SAC (see Table A.1)
A2.1	30 – 230	10	Quasi Peak / 120 kHz	40
	230 – 1 000			47
A2.2	30 – 230	3		50
	230 – 1 000			57
Apply only A2.1 or A2.2 across the entire frequency range.				

Table A.4 – Requirements for radiated emissions at frequencies up to 1 GHz for Class B equipment

Table clause	Frequency range MHz	Measurement		Class B limits dB(μV/m)
		Distance m	Detector type/ bandwidth	OATS/SAC (see Table A.1)
A4.1	30 – 230	10	Quasi Peak / 120 kHz	30
	230 – 1 000			37
A4.2	30 – 230	3		40
	230 – 1 000			47
Apply only table clause A4.1 or A4.2 across the entire frequency range.				

Table A.6 – Requirements for radiated emissions from FM receivers

Table clause	Frequency range MHz	Measurement		Class B limit dB(μV/m)	
		Distance m	Detector type/ bandwidth	Fundamental	Harmonics
				OATS/SAC (see Table A.1)	OATS/SAC (see Table A.1)
A6.1	30 – 230	10	Quasi peak/ 120 kHz	50	42
	230 – 300				42
	300 – 1 000				46
A6.2	30 – 230	3		60	52
	230 – 300				52
	300 – 1 000				56
Apply only A.6.1 or A.6.2 across the entire frequency range. These relaxed limits apply only to emissions at the fundamental and harmonic frequencies of the local oscillator. Signals at all other frequencies shall be compliant with the limits given in Table A.4.					

2.2.2 LIMITS OF RADIATED EMISSION MEASUREMENT (Above 1000MHz)

Table A.3 – Requirements for radiated emissions at frequencies above 1 GHz for Class A equipment

Table clause	Frequency range MHz	Measurement		Class A limits dB(μV/m)
		Distance m	Detector type/ bandwidth	FSOATS (see Table A.1)
A3.1	1 000 – 3 000	3	Average / 1 MHz	56
	3 000 – 6 000			60
A3.2	1 000 – 3 000		Peak / 1 MHz	76
	3 000 – 6 000			80
Apply A3.1 and A3.2 across the frequency range from 1 000 MHz to the highest required frequency of measurement derived from Table 1.				

Table A.5 – Requirements for radiated emissions at frequencies above 1 GHz for Class B equipment

Table clause	Frequency range MHz	Measurement		Class B limits dB(μV/m)
		Distance m	Detector type/ bandwidth	FSOATS (see Table A.1)
A5.1	1 000 – 3 000	3	Average/ 1 MHz	50
	3 000 – 6 000			54
A5.2	1 000 – 3 000		Peak/ 1 MHz	70
	3 000 – 6 000			74
Apply A5.1 and A5.2 across the frequency range from 1 000 MHz to the highest required frequency of measurement derived from Table 1.				

Notes:

(1) The limit for radiated test was performed according to as following: CISPR 32.

(2) The tighter limit applies at the band edges.

(3) Emission level (dBμV/m)=20log Emission level (uV/m).

2.2.3 TEST PROCEDURE

a. The measuring distance of at 3 m shall be used for measurements at frequency up to 1GHz. For frequencies above 1GHz, any suitable measuring distance may be used.
b. The EUT was placed on the top of a rotating table 0.8 meters above the ground at a 10 meter open area test site. The table was rotated 360 degrees to determine the position of the highest radiation.
c. The height of the equipment or of the substitution antenna shall be 0.8 m; the height of the test antenna shall vary between 1 m to 4 m. Both horizontal and vertical polarizations of the antenna are set to make the measurement.
d. The initial step in collecting conducted emission data is a spectrum analyzer peak detector mode pre-scanning the measurement frequency range. Significant peaks are then marked and then Quasi Peak detector mode re-measured.
e. If the Peak Mode measured value compliance with and lower than Quasi Peak Mode Limit, the EUT shall be deemed to meet QP Limits and then no additional QP Mode measurement performed.
f. For the actual test configuration, please refer to the related Item –EUT Test Photos.

2.2.4 TEST SETUP

(A) Radiated Emission Test Set-Up Frequency Below 1 GHz

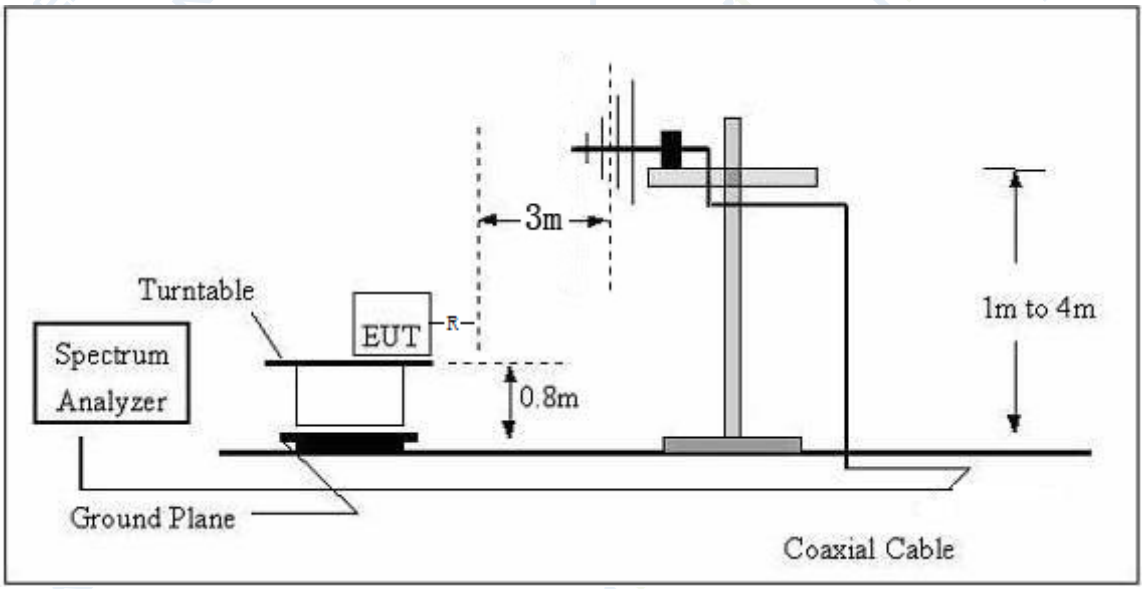

(B) Radiated Emission Test Set-Up Frequency Above 1GHz

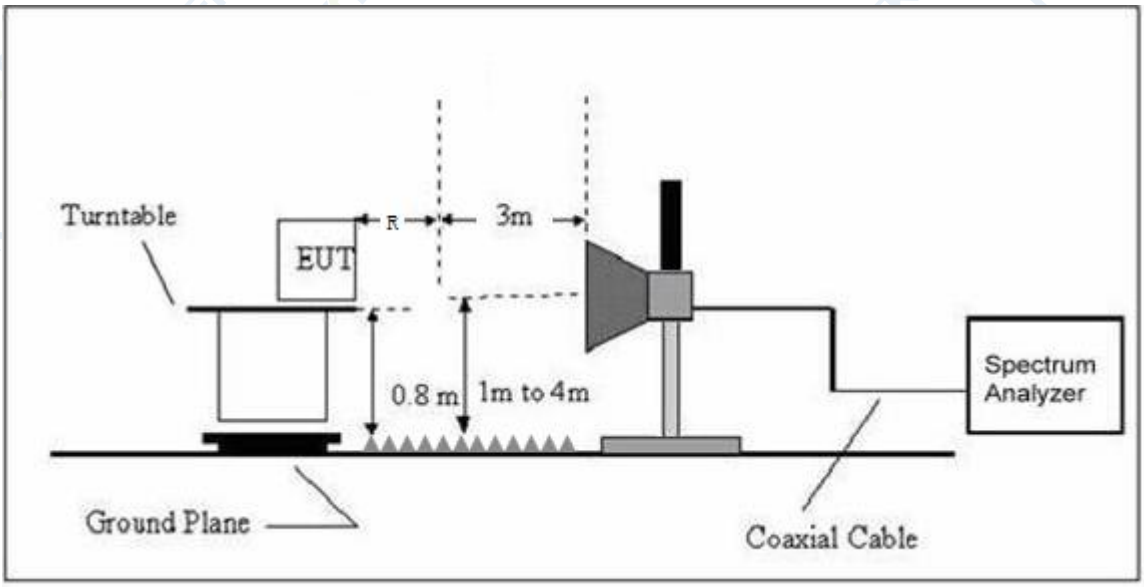

2.2.5 EUT OPERATING CONDITIONS

The EUT tested system was configured as the statements of **2.2** Unless otherwise a special operating condition is specified in the follows during the testing.

2.2.6 TEST RESULTS (30-1000MHz)

EUT:	Mobile Phone	Model Name:	GQ3117
Temperature:	23.9℃	Relative Humidity:	52%
Pressure:	1010 hPa	Polarization:	Vertical
Test Power:	DC 5V from Adapter AC 230V/50Hz	Test Mode:	Mode 1

Frequency (MHz)	Meter Reading (dBμV)	Factor (dB)	Emission Level (dBμV/m)	Limits (dBμV/m)	Margin (dB)	Remark
30.1054	7.26	26.41	33.67	40.00	-6.33	QP
47.3255	11.14	16.81	27.95	40.00	-12.05	QP
85.2980	11.55	16.11	27.66	40.00	-12.34	QP
164.3301	14.13	17.81	31.94	40.00	-8.06	QP
189.0743	13.45	16.51	29.96	40.00	-10.04	QP
975.7529	8.07	31.68	39.75	47.00	-7.25	QP

Remark:
1. Emission Level= Meter Reading+ Factor, Margin= Emission Level- Limit.

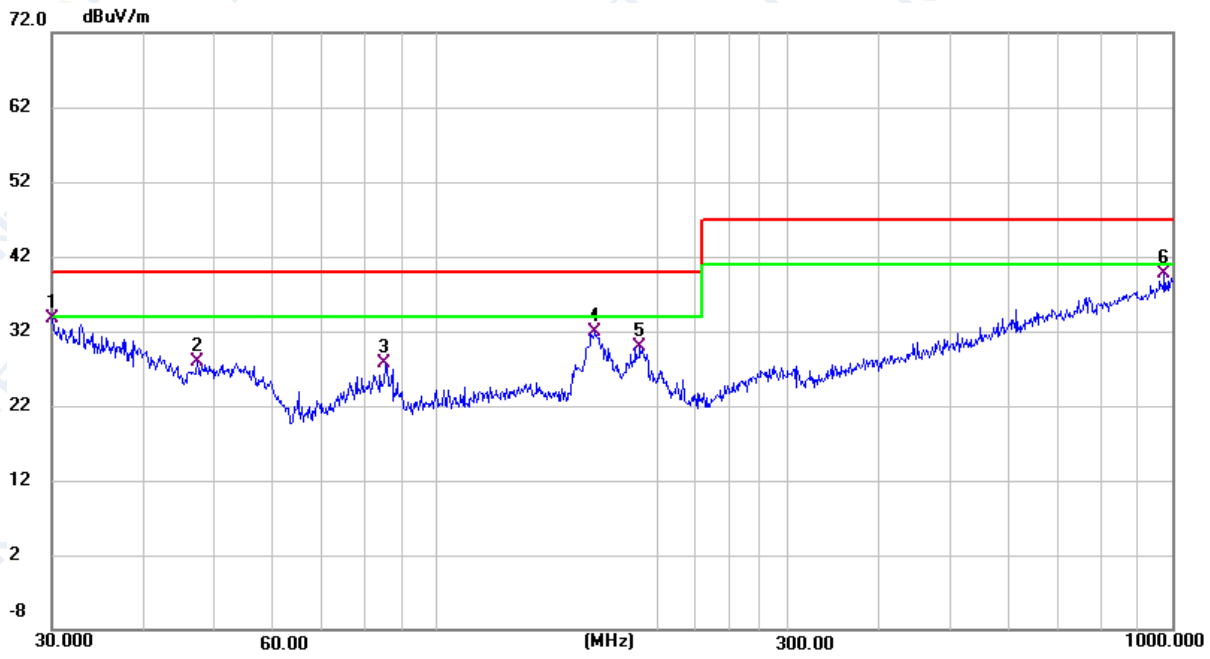

EUT:	Mobile Phone	Model Name:	GQ3117
Temperature:	24.5℃	Relative Humidity:	51%
Pressure:	1010 hPa	Polarization:	Horizontal
Test Power:	DC 5V from Adapter AC 230V/50Hz	Test Mode:	Mode 1

Frequency (MHz)	Meter Reading (dBμV)	Factor (dB)	Emission Level (dBμV/m)	Limits (dBμV/m)	Margin (dB)	Remark
30.7455	5.84	26.05	31.89	40.00	-8.11	QP
187.7530	11.50	16.55	28.05	40.00	-11.95	QP
284.9767	10.49	20.03	30.52	47.00	-16.48	QP
497.6765	6.81	24.85	31.66	47.00	-15.34	QP
742.2587	8.07	28.70	36.77	47.00	-10.23	QP
1000.0000	6.60	32.65	39.25	47.00	-7.75	QP

Remark:
1. Emission Level= Meter Reading+ Factor, Margin= Emission Level- Limit.

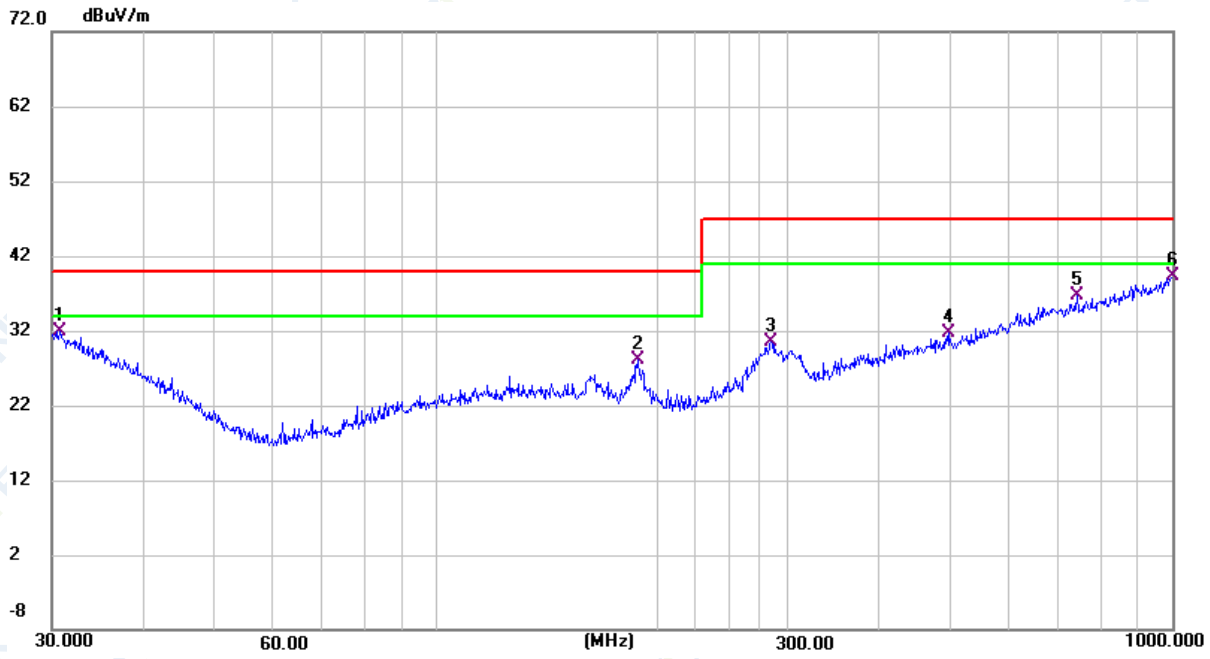

Note: The test modes were carried out for all operation modes. The worst test mode for test data was showed in the report.

2.2.7 TEST RESULTS(1000-6000MHz)

EUT:	Mobile Phone	Model Name:	GQ3117
Temperature:	24.5℃	Relative Humidity:	51%
Pressure:	1010 hPa	Test Mode:	Mode 1
Test Power:	DC 5V from Adapter AC 230V/50Hz		

Polar (H/V)	Frequency (MHz)	Meter Reading (dBμV/m)	Factor (dB)	Emission Level (dBμV/m)	Limits (dBμV/m)	Margin (dB)	Remark
V	1095.000	36.89	5.03	41.92	74.00	-32.08	peak
V	2730.000	35.65	8.58	44.23	74.00	-29.77	peak
V	3450.000	36.00	10.09	46.09	74.00	-27.91	peak
V	4710.000	33.10	13.11	46.21	74.00	-27.79	peak
V	5355.000	33.78	14.12	47.90	74.00	-26.10	peak
V	5935.000	33.50	15.44	48.94	74.00	-25.06	peak
H	1070.000	37.74	4.97	42.71	74.00	-31.29	peak
H	3060.000	35.17	9.93	45.10	74.00	-28.90	peak
H	3310.000	35.54	10.12	45.66	74.00	-28.34	peak
H	4630.000	34.12	12.91	47.03	74.00	-26.97	peak
H	5155.000	33.17	14.27	47.44	74.00	-26.56	peak
H	5990.000	33.03	15.53	48.56	74.00	-25.44	peak

Remark: Emission Level= Meter Reading+ Factor, Margin= Emission Level- Limit
Note: The test modes were carried out for all operation modes. The worst test mode for test data was showed in the report.

2.3 HARMONICS CURRENT

2.3.1LIMITS OF HARMONICS CURRENT

Table 1 – Limits for Class A equipment

Harmonic order (n)	Maximum permissible harmonic current (A)
Odd harmonics	
3	2.3
5	1.14
7	0.77
9	0.4
11	0.33
13	0.21
15≤n≤39	0.15*(15/n)
Even harmonics	
2	1.08
4	0.43
6	0.30
8≤n≤40	0.23*(8/n)

Note: Reference standard of the table above: EN61000-3-2.

3.3.2 TEST PROCEDURE

a. The EUT was placed on the top of a wooden table 0.8 meters above the ground and operated to produce the maximum harmonic components under normal operating conditions.

b. The classification of EUT is according to section 5 of EN 61000-3-2. The EUT is classified as follows:

Class A: Balanced three-phase equipment, Household appliances excluding equipment as Class D, Tools excluding portable tools, Dimmers for incandescent lamps, audio equipment, equipment not specified in one of the three other classes.

Class B: Portable tools. Portable tools.; Arc welding equipment which is not professional equipment.

Class C: Lighting equipment.

Class D: Equipment having a specified power less than or equal to 600W of the following types: Personal computers and personal computer monitors and television receivers.

c. The correspondent test program of test instrument to measure the current harmonics emanated from EUT is chosen. The measure time shall be not less than the time necessary for the EUT to be exercised.

3.3.3 EUT OPERATING CONDITIONS

The EUT tested system was configured as the statements of 2.3 Unless otherwise a special operating condition is specified in the follows during the testing.

3.3.4 TEST SETUP

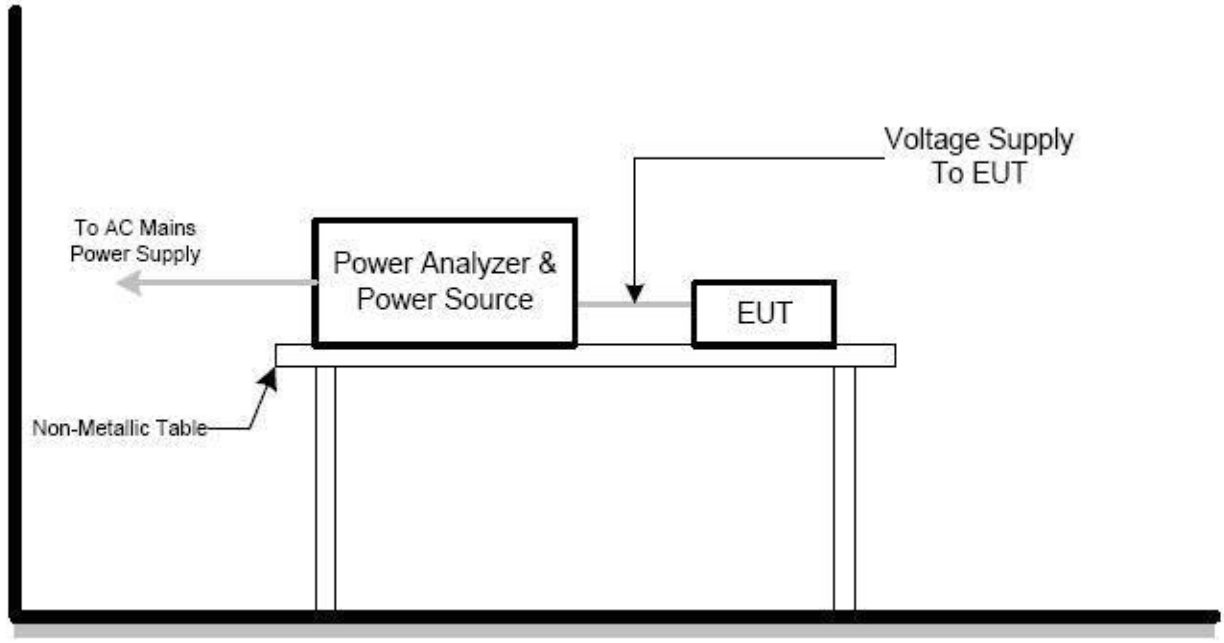

3.3.5 TEST RESULTS

EUT:	Mobile Phone	Model Name:	GQ3117
Temperature:	22℃	Relative Humidity:	53%
Pressure:	1012hPa	Test duration:	150s
Classification:	Class A	Test Power:	N/A
Test Mode:	N/A		

Note: The active input power of the EUT is less than 75 W. No limits apply for equipment with an active input power up to and including 75W.

2.4 VOLTAGE FLUCTUATION AND FLICKERS

2.4.1 LIMITS OF VOLTAGE FLUCTUATION AND FLICKERS

Test items	Limits(EN61000-3-3)	Descriptions
P_{st}	≤1.0, T_p=10min	short-term flicker indicator
P_{lt}	≤0.65, T_p=2h	long-term flicker indicator
d_c	≤3.3%	relative steady-state voltage change
d_{max}	≤4%(or 6%$_{Note(1)}$, 7% $_{Note(2)}$)	maximum relative voltage change:
$d_{(t)}$	≤3.3%, more than 500ms	relative voltage change characteristic

Note:

1. 6 % for equipment which is:
   a. switched manually, or
   b. switched automatically more frequently than twice per day, and also has either a delayed restart (the delay being not less than a few tens of seconds), or manual restart, after a power supply interruption.
2. 7 % for equipment which is
   a. attended whilst in use (for example: hair dryers, vacuum cleaners, kitchen equipment such as mixers, garden equipment such as lawn mowers, portable tools such as electric drills), or
   b. switched on automatically, or is intended to be switched on manually, no more than twice per day, and also has either a delayed restart (the delay being not less than a few tens of seconds) or manual restart, after a power supply interruption.

3.4.2 TEST PROCEDURE

a. Harmonic Current Test:

Test was performed according to the procedures specified in Sub-clause 6.2 of IEC/EN 61000-3-2 depend on which standard adopted for compliance measurement.

b. Fluctuation and Flickers Test:

Tests was performed according to the Test Conditions/Assessment of Voltage Fluctuations specified in Clause 6.0/4.0 of IEC/EN 61000-3-3 depend on which standard adopted for compliance measurement.

c. All types of harmonic current and/or voltage fluctuation in this report are assessed by direct measurement using flicker-meter.

3.4.3 EUT OPERATING CONDITIONS

The EUT tested system was configured as the statements of 2.3 Unless otherwise a special operating condition is specified in the follows during the testing.

3.4.4 TEST SETUP

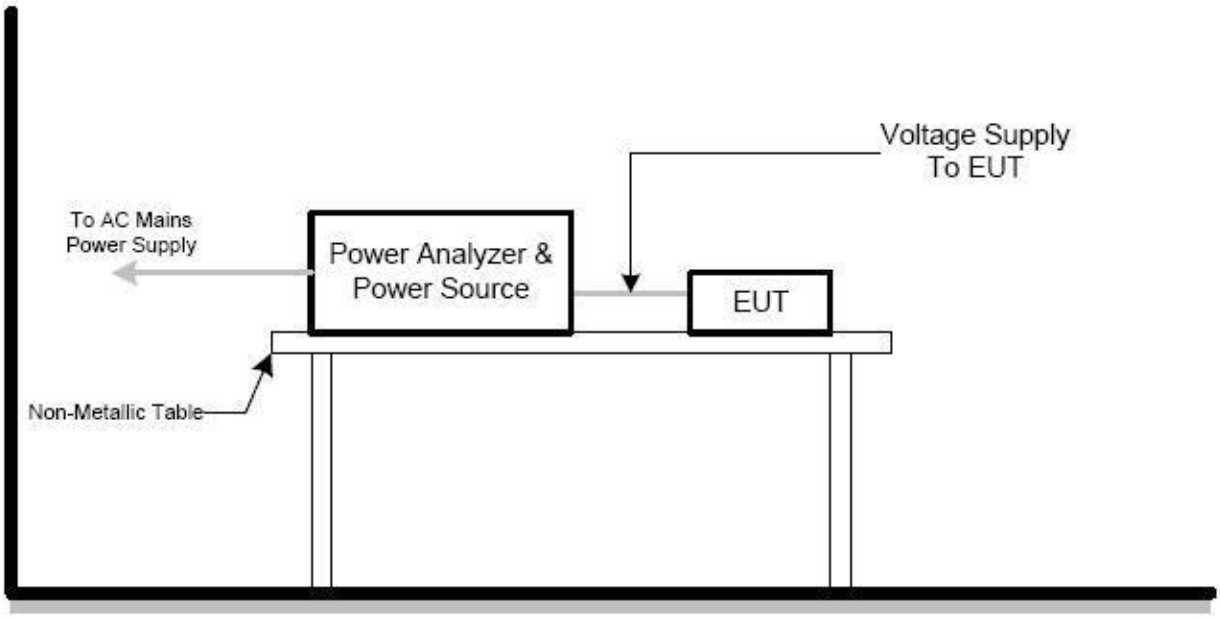

3.4.5 TEST RESULTS

EUT:	Mobile Phone	Model Name:	GQ3117
Temperature:	22.2℃	Relative Humidity:	52%
Pressure:	1010 hPa	Test Power:	DC 5V from Adapter AC 230V/50Hz
Test Mode:	Mode 1		

	EUT values	Limit	Result
Pst	0.015	1.00	PASS
Plt	0.007	0.65	PASS
dc [%]	0.000	3.30	PASS
dmax [%]	0.000	4.00	PASS
Tmax [s]	0.000	0.50	PASS

3. EMC IMMUNITY TEST

3.1 GENERAL PERFORMANCE CRITERIA

3.1.1 PERFORMANCE CRITERIA

According to **EN 55035** standard, the general performance criteria as following:

Criterion A	The equipment shall continue to operate as intended without operator intervention. No degradation of performance or loss of function is allowed below a performance level specified by the manufacturer when the equipment is used as intended. The performance level may be replaced by a permissible loss of performance. If the minimum performance level or the permissible performance loss is not specified by the manufacturer, then either of these may be derived from the product description and documentation, and by what the user may reasonably expect from the equipment if used as intended.
Criterion B	After the test, the equipment shall continue to operate as intended without operator intervention. No degradation of performance or loss of function is allowed, after the application of the phenomena below a performance level specified by the manufacturer, when the equipment is used as intended. The performance level may be replaced by a permissible loss of performance. During the test, degradation of performance is allowed. However, no change of operating state or stored data is allowed to persist after the test.
Criterion C	Loss of function is allowed, provided the function is self-recoverable, or can be restored by the operation of the controls by the user in accordance with the manufacturer's instructions. Functions, and/or information stored in non-volatile memory, or protected by a battery backup, shall not be lost.

According to **EN 301 489-3** standard, the general performance criteria as following:

Criteria	During the test	After the test
A	Operate as intended No loss of function No unintentional responses	Operate as intended No loss of function No degradation of performance No loss of stored data or user programmable functions
B	May show loss of function No unintentional responses	Operate as intended Lost function(s) shall be self-recoverable No degradation of performance No loss of stored data or user programmable functions

According to **EN 301 489-17** standard, the general performance criteria as following:

Criteria	During the test	After the test
A	Shall operate as intended (see note 1). Shall be no loss of function. Shall be no unintentional transmissions	Shall operate as intended. Shall be no degradation of performance (see note 3). Shall be no loss of function. Shall be no loss of stored data or user programmable functions
B	May show loss of function (one or more). May show degradation of performance (see note 2). Shall be no unintentional transmissions.	Functions shall be self-recoverable. Shall operate as intended after recovering. Shall be no degradation of performance (see note 3). Shall be no loss of stored data or user programmable functions.
C	May be loss of function (one or more)	Functions shall be recoverable by the operator. Shall operate as intended after recovering. Shall be no degradation of performance (see note 3).

NOTE 1: Operate as intended during the test allows a level of degradation not below a minimum performance level specified by the manufacturer for the use of the apparatus as intended. In some cases the specified minimum performance level may be replaced by a permissible degradation of performance. If the minimum performance level or the permissible performance degradation is not specified by the manufacturer then either of these may be derived from the product description and documentation (including leaflets and advertising) and what the user may reasonably expect from the apparatus if used as intended.

NOTE 2: Degradation of performance during the test is understood as a degradation to a level not below a minimum performance level specified by the manufacturer for the use of the apparatus as intended. In some cases the specified minimum performance level may be replaced by a permissible degradation of performance.

If the minimum performance level or the permissible performance degradation is not specified by the manufacturer then either of these may be derived from the product description and documentation (including leaflets and advertising) and what the user may reasonably expect from the apparatus if used as intended.

NOTE 3: No degradation of performance after the test is understood as no degradation below a minimum performance level specified by the manufacturer for the use of the apparatus as intended. In some cases the specified minimum performance level may be replaced by a permissible degradation of performance. After the test no change of actual operating data or user retrievable data is allowed. If the minimum performance level or the permissible performance degradation is not specified by the manufacturer then either of these may be derived from the product description and documentation (including leaflets and advertising) and what the user may reasonably expect from the apparatus if used as intended.

According to **EN 301 489-19** standard, the general performance criteria as following:

If the EUT is of a non specialized nature or the EUT is combined with an ancillary equipment, the test modulation, test arrangements, etc. as required in clause 4 shall apply.

The EUT, for all immunity tests according to the present document, except the spot frequency test of the immunity test with radiated RF electromagnetic fields (see ETSI EN 301 489-1 [1], clause 9.2), shall be assessed for:

- the storage of messages in the memory of the EUT at the start of the test;
- unintentional responses of the EUT during the test;
- the maintenance of the EUT memory assessed at the conclusion of the test;
- the ability to receive and store messages at the conclusion of the test.

For the spot frequency test of the immunity test with radiated RF electromagnetic fields (see ETSI EN 301 489-1 [1], clause 9.2) the EUT shall be assessed by monitoring the accuracy of the call received alert signal.

Performance criteria for Continuous phenomena applied to ROMES and ROGNSS receivers (CR)

For the EUT, excluding spot frequency tests as part of the immunity test with radiated RF electromagnetic fields (see ETSI EN 301 489-1 [1], clause 9.2):

- the general performance criteria set out in clause 6.1;
- during the test no false calls shall occur;
- at the conclusion of the test comprising the series of individual exposures the EUT shall operate as intended with no loss of functions or stored data (messages), as declared by the manufacturer.

For the spot frequency test as part of the immunity test with radiated RF electromagnetic fields (see ETSI EN 301 489-1 [1], clause 9.2) the EUT shall be assessed by monitoring the accuracy of the call received alert signal.

Performance criteria for Transient phenomena applied to ROMES and ROGNSS receivers (TR)

For the EUT:

- the general performance criteria set out in clause 6.1;
- during the test no false calls shall occur;
- at the conclusion of the test comprising the series of individual exposures, the EUT shall operate as intended with no loss of function and/or stored data (messages), as declared by the manufacturer.

Special conditions for EMC immunity tests

Table 2: Special conditions for EMC immunity tests

Reference to clauses in ETSI EN 301 489-1 [1]	Special product-related conditions, additional to or modifying the test conditions in ETSI EN 301 489-1 [1], clause 9
9.1 Test configuration; Test methods and levels for immunity tests	The message memory shall be loaded with recognizable messages. The EUT shall operate in stand-by mode of operation, except for the spot frequency test as part of the immunity test with radiated RF electromagnetic fields (see ETSI EN 301 489-1 [1], clause 9.2) where repetitive calls shall be coupled to the input of the receiver. • for the immunity tests of ancillary equipment, without a separate pass/fail criteria, an EUT coupled to the ancillary equipment shall be used to judge whether the ancillary equipment passes or fails.
9.2.2 Test method; Radio frequency electromagnetic field	**Spot frequency test:** A spot frequency test shall additionally be performed at: • 80 MHz; • 104 MHz; • 136 MHz; • 165 MHz; • 200 MHz; • 260 MHz; • 330 MHz; • 430 MHz; • 560 MHz; • 715 MHz ± 1 MHz; • a spot frequency test shall be performed at 920 MHz ± 1 MHz using a test level of 3 V/m (measured unmodulated) 100 % modulated by 200 Hz pulses of equal mark to space ratio.

PERFORMANCE FOR TT

The performance criteria B shall apply, except for voltage dips of 100 ms and voltage interruptions of 5 000 ms duration, for which performance criteria C shall apply. Tests shall be repeated with the EUT in standby mode (if applicable) to ensure that unintentional transmission does not occur. In systems using acknowledgement signals, it is recognized that an acknowledgement (ACK) or not-acknowledgement (NACK) transmission may occur, and steps should be taken to ensure that any transmission resulting from the application of the test is correctly interpreted.

PERFORMANCE FOR TR

The performance criteria B shall apply, except for voltage dips of 100 ms and voltage interruptions of 5 000 ms duration for which performance criteria C shall apply. Where the EUT is a transceiver, under no circumstances, shall the transmitter operate unintentionally during the test. In systems using acknowledgement signals, it is recognized that an ACK or NACK transmission may occur, and steps should be taken to ensure that any transmission resulting from the application of the test is correctly interpreted.

PERFORMANCE FOR CT

The performance criteria A shall apply. Tests shall be repeated with the EUT in standby mode (if applicable) to ensure that unintentional transmission does not occur. In systems using acknowledgement signals, it is recognized that an Acknowledgement (ACK) or Not Acknowledgement (NACK) transmission may occur, and steps should be taken to ensure that any transmission resulting from the application of the test is correctly interpreted.

PERFORMANCE FOR CR

The performance criteria A shall apply. Where the EUT is a transceiver, under no circumstances, shall the transmitter operate unintentionally during the test. In systems using acknowledgement signals, it is recognized that an ACK or NACK transmission may occur, and steps should be taken to ensure that any transmission resulting from the application of the test is correctly interpreted.

According to **EN 301 489-52** standard, the general performance criteria as following:

GSM and DCS Performance Criteria

Please refer to the standard ETSI EN 301 489-52 V1.2.1 clause 6.1.

CDMA Direct Spread (UTRA and E-UTRA) Performance Criteria

Please refer to the standard ETSI EN 301 489-52 V1.2.1 clause 6.2.

3.2 GENERAL PERFORMANCE CRITERIA TEST SETUP

The EUT tested system was configured as the statements of **2.2** Unless otherwise a special operating condition is specified in the follows during the testing.

3.3 ESD TESTING

3.3.1 TEST SPECIFICATION

Basic Standard:	IEC/EN 61000-4-2
Discharge Impedance:	330 ohm / 150 pF
Required Performance	B
Discharge Voltage:	Air Discharge: 2kV/4kV/8kV Contact Discharge: 2kV/4kV (Direct/Indirect)
Polarity:	Positive & Negative
Number of Discharge:	Air Discharge: min. 20 times at each test point Contact Discharge: min. 200 times in total
Discharge Mode:	A/C Discharge
Discharge Period:	1 second minimum

3.3.2 TEST PROCEDURE

The test generator necessary to perform direct and indirect application of discharges to the EUT in the following manner:

a. Indirect application of the discharge:

Vertical Coupling Plane (VCP):

At least 10 single discharges (in the most sensitive polarity) shall be applied to the centre of one vertical edge of the coupling plane. The coupling plane, of dimensions 0,5 m × 0,5 m, is placed parallel to, and positioned at a distance of 0,1 m from, the EUT.

Discharges shall be applied to the coupling plane, with sufficient different positions such that the four faces of the EUT are completely illuminated. One VCP position is considered to illuminate 0,5 m × 0,5 m area of the EUT surface.

Horizontal Coupling Plane (HCP):

Discharge to the HCP shall be made horizontally to the edge of the HCP.

At least 10 single discharges (in the most sensitive polarity) shall be applied at the front edge of each HCP opposite the centre point of each unit (if applicable) of the EUT and 0.1m from the front of the EUT. The long axis of the discharge electrode shall be in the plane of the HCP and perpendicular to its front edge during the discharge.

The discharge electrode shall be in contact with the edge of the HCP before the discharge switch is operated

b. Direct application of discharges to the EUT

The test shall be performed with single discharges. On each pre-selected point at least 10 single discharges (in the most sensitive polarity) shall be applied.

For the time interval between successive single discharges an initial value of 1 s is recommended. Longer intervals may be necessary to determine whether a system failure has occurred.

3.3.3 TEST SETUP

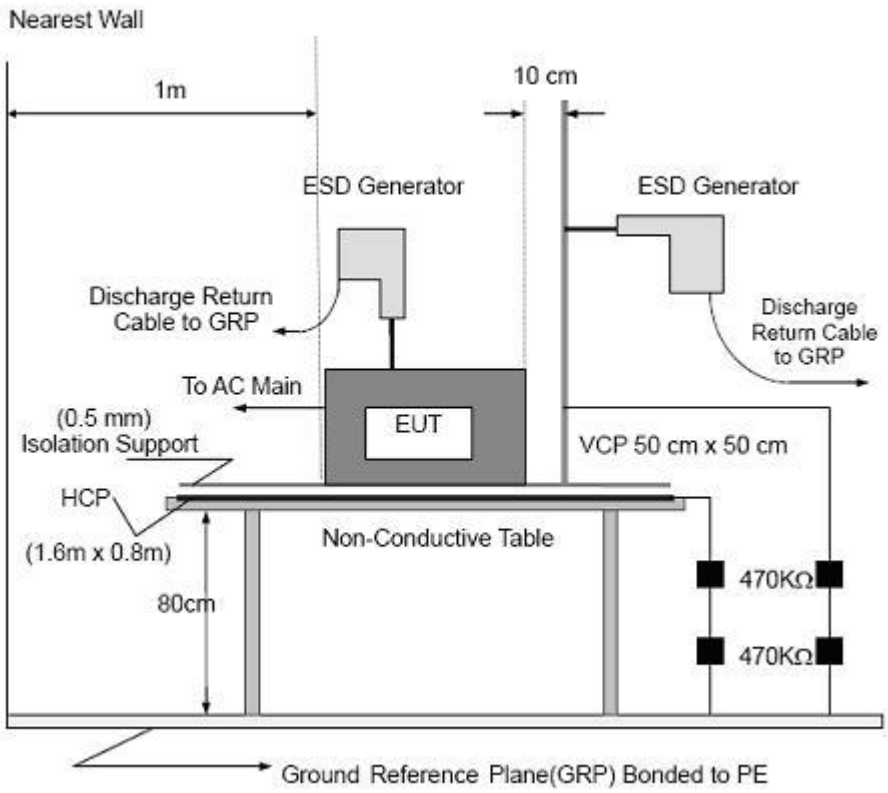

Note:

TABLE-TOP EQUIPMENT

The configuration consisted of a wooden table 0.8 meters high standing on the Ground Reference Plane. The GRP consisted of a sheet of aluminum at least 0.25mm thick, and 2.5 meters square connected to the protective grounding system. A Horizontal Coupling Plane (1.6m x 0.8m) was placed on the table and attached to the GRP by means of a cable with 940k total impedance. The equipment under test, was installed in a representative system as described in section 7 of IEC /EN 61000-4-2, and its cables were placed on the HCP and isolated by an insulating support of 0.5mm thickness. A distance of1-meter minimum was provided between the EUT and the walls of the laboratory and any other metallic structure.

FLOOR-STANDING EQUIPMENT

The equipment under test was installed in a representative system as described in section 7 of IEC/EN 61000-4-2, and its cables were isolated from the Ground Reference Plane by an insulating support of 0.1-meter thickness. The GRP consisted of a sheet of aluminum that is at least 0.25mm thick, and 2.5meters square connected to the protective grounding system and extended at least 0.5 meters from the EUT on all sides.

3.3.4 TEST RESULTS

EUT:	Mobile Phone	Model Name:	GQ3117
Temperature:	22℃	Relative Humidity:	53%
Pressure:	1010 hPa	Test Power:	DC 5V from Adapter AC 230V/50Hz / DC 5V from PC
Test Mode:	Mode 1/2/3/4/5/6/7/8/9/10/11		

Mode	Contact Discharge (Indirect)							Criterion	Result
Test level(kV)	Test Point	2		4		6			
Test Location		+	-	+	-	+	-		
HCP	Front	P	P	P	P			B	Complies
	Rear	P	P	P	P				
	Left	P	P	P	P				
	Right	P	P	P	P				
VCP	Front	P	P	P	P				
	Rear	P	P	P	P				
	Left	P	P	P	P				
	Right	P	P	P	P				

TEST RESULT

Mode 5/6/7/8/9/10/11

Mode	Air Discharge								Contact Discharge								BT / WIFI / GSM / WCDMA / LTE/ NFC Observation	GPS Observation	Criterion	Result
Test level(kV)	2		4		8		15		2		4		6		8					
Test Location	+	-	+	-	+	-	+	-	+	-	+	-	+	-	+	-				
A1	P	P	P	P	P	P											TT,TR	TR	B	Complies
A2	P	P	P	P	P	P														
A3	P	P	P	P	P	P														
A4	P	P	P	P	P	P														
A5	P	P	P	P	P	P														
A6	P	P	P	P	P	P														
A7	P	P	P	P	P	P														
C1									P	P	P	P								
C2									P	P	P	P								

Mode 1/2/3/4

Mode	Air Discharge								Contact Discharge								Criterion	Result
Test level(kV)	2		4		8		15		2		4		6		8			
Test Location	+	-	+	-	+	-	+	-	+	-	+	-	+	-	+	-		
A1	P	P	P	P	P	P											B	Complies
A2	P	P	P	P	P	P												
A3	P	P	P	P	P	P												
A4	P	P	P	P	P	P												
A5	P	P	P	P	P	P												
A6	P	P	P	P	P	P												
A7	P	P	P	P	P	P												
C1									P	P	P	P						
C2									P	P	P	P						

Note:

1) +/- denotes the Positive/Negative polarity of the output voltage.
2) In the table: 'P' represents 'PASS'; 'F' represents 'FAIL'.
3) There was not any unintentional transmission in standby mode.

3.3.5 PHOTO(S) SHOWN THE LOCATION(S) OF ESD EVALUATED

Photo 1

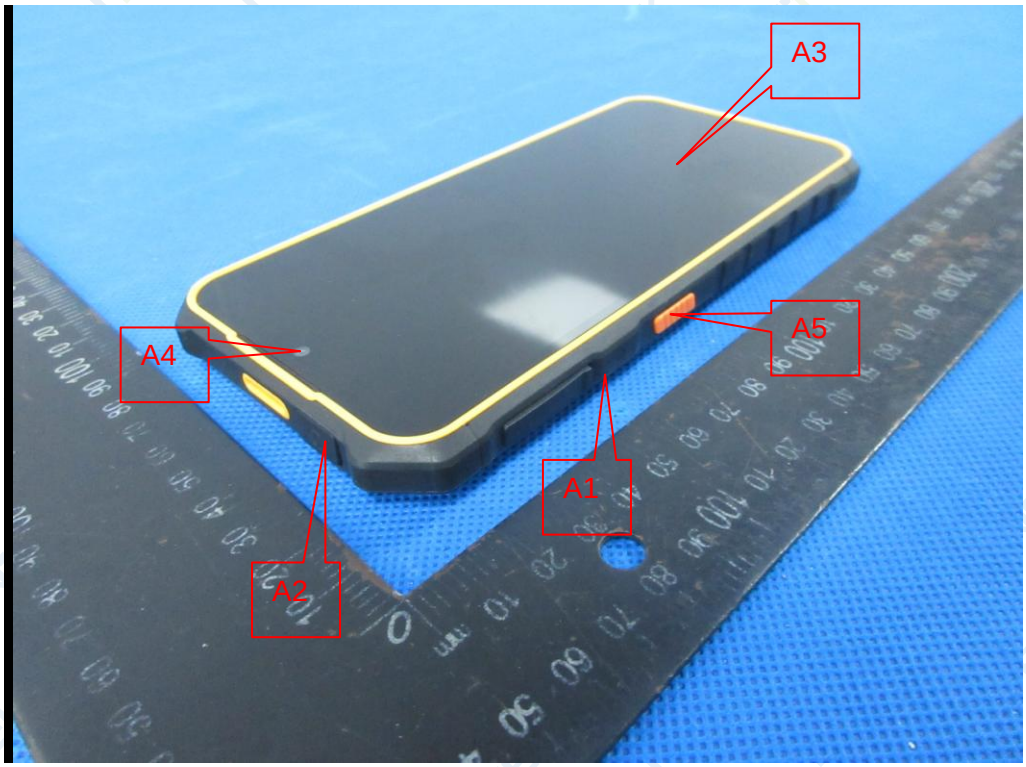

Photo 2

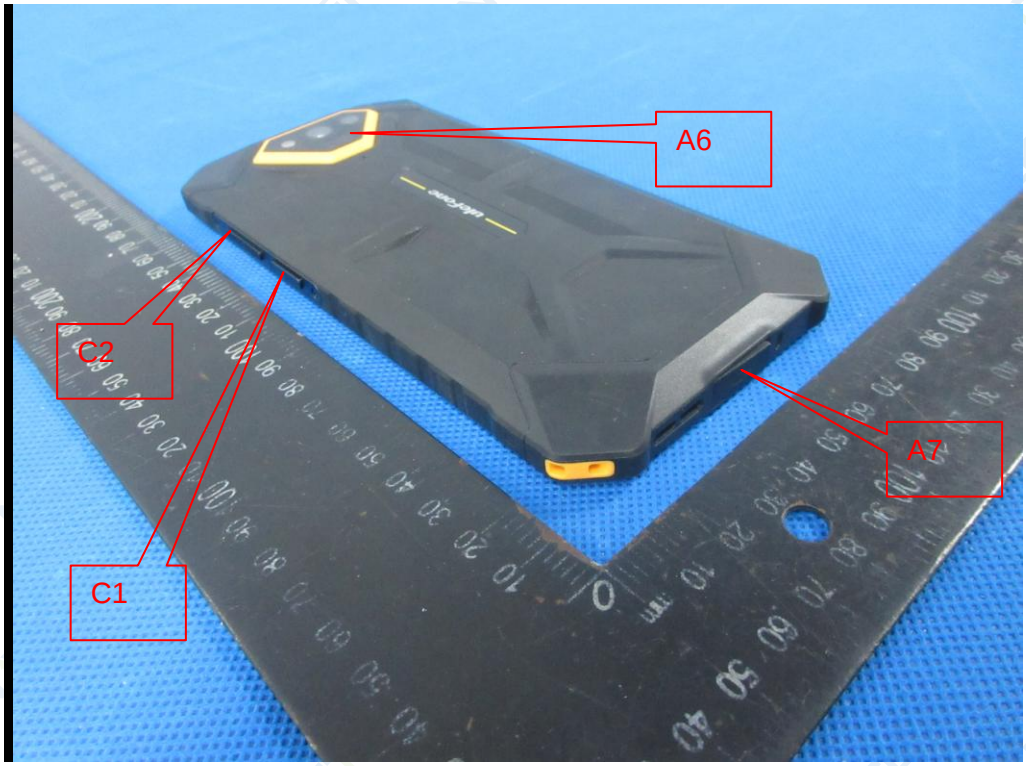

3.4 RS TESTING

3.4.1 TEST SPECIFICATION

Basic Standard:	IEC/EN 61000-4-3
Required Performance	A
Frequency Range:	According to EN 301 489-1: 80 MHz - 6000 MHz ; According to EN 55035: 80 MHz to 1000 MHz 1800 MHz 2600 MHz 3500 MHz 5000 MHz
Field Strength:	3 V/m
Modulation:	1kHz Sine Wave, 80%, AM Modulation
Frequency Step:	1 % of fundamental
Polarity of Antenna:	Horizontal and Vertical
Test Distance:	3 m
Antenna Height:	1.5 m
Dwell Time:	at least 3 seconds

3.4.2 TEST PROCEDURE

The EUT and support equipment, which are placed on a table that is 0.8 meter above ground and the testing was performed in a fully-anechoic chamber.

The testing distance from antenna to the EUT was 3 meters.

The other condition as following manner:

a. The field strength level was 3V/m.

b. The frequency range is swept from 80 MHz to 6000 MHz, 1800 MHz, 2600 MHz, 3500 MHz, 5000 MHz with the signal 80%amplitude modulated with a 1kHz sine wave. The rate of sweep did not exceed 1.5 x 10^{-3} decade/s. Where the frequency range is swept incrementally, the step size was 1% of fundamental.

c. Sweep Frequency 900 MHz, with the Duty Cycle:1/8 and Modulation: Pulse 217 Hz(if applicable)

d. The dwell time at each frequency shall be not less than the time necessary for the EUT to be able to respond.

e. The test was performed with the EUT exposed to both vertically and horizontally polarized fields on each of the four sides.

f. For the actual test configuration, please refer to the related Item –EUT Test Photos.

3.4.3 TEST SETUP

☒ Mobile Communication

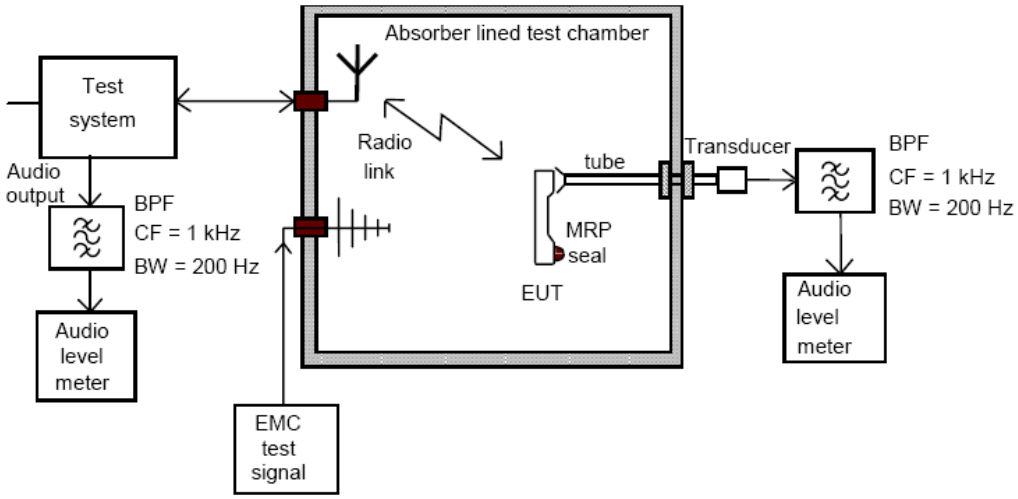

☒ General Communication

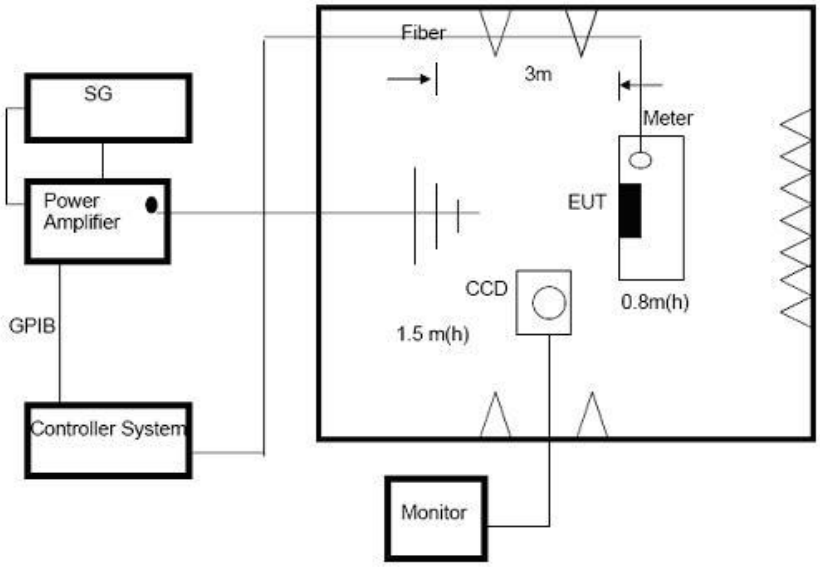

Note:

For the actual test configuration, please refer to the related Item –EUT Test Photos.

TABLE-TOP EQUIPMENT

The EUT installed in a representative system as described in section 7 of IEC/EN 61000-4-3 was placed on a non-conductive table 0.8 meters in height. The system under test was connected to the power and signal wire according to relevant installation instructions.

FLOOR-STANDING EQUIPMENT

The EUT installed in a representative system as described in section 7 of IEC/EN 61000-4-3 was placed on a non-conductive wood support 0.1 meters in height. The system under test was connected to the power and signal wire according to relevant installation instructions.

3.4.4 TEST RESULTS

EUT:	Mobile Phone	Model Name:	GQ3117
Temperature:	23℃	Relative Humidity:	57%
Pressure:	1010 hPa	Test Power:	DC 5V from Adapter AC 230V/50Hz / DC 5V from PC
Test Mode:	Mode 1/2/3/4/5/6/7/8/9/10/11		

TEST RESULT

LTE FDD B1 / B3 / B7 / B8 / B20 / B28 / B40 Data Link

Frequency Range (MHz)	RF Field Position	R.F. Field Strength	Azimuth	Observation	Results
80~1000 1000-6000	H / V	3 V/m (rms) AM Modulated 1000Hz, 80%	Front	**CT,CR**	**P**
			Rear		
			Left		
			Right		

Note:

1. The exclusion band has not been tested in 80MHz~6GHz.
   For channelized equipment the exclusion band shall be calculated by using the following formulae:
   For the lower edge for the exclusion band:
   EXband(lower) = BandRX(lower) – nChWRX
   and for the upper edge of the exclusion band:
   EXband(upper) = BandRX(upper) + nChWRX
   Where n = number of channel widths required for exclusion band.
2. In the data transfer mode, the performance criteria shall be that the throughput shall be ⩾ 95 % of the maximum throughput of the reference measurement channel

GSM 900 / 1800 / WCDMA 2100 / 900 Uplink and Downlink

Frequency Range (MHz)	RF Field Position	R.F. Field Strength	Azimuth	Observation	Perform. Criteria	Results
80~1000 1000-6000	H / V	3 V/m (rms) AM Modulated 1000Hz, 80%	Front	**CT,CR**	**A**	**P**
			Rear			
			Left			
			Right			

Note:

1. The exclusion band has not been tested in 80MHz~6GHz.
   For channelized equipment the exclusion band shall be calculated by using the following formulae:
   For the lower edge for the exclusion band:
   EXband(lower) = BandRX(lower) – nChWRX
   and for the upper edge of the exclusion band:
   EXband(upper) = BandRX(upper) + nChWRX
   Where n = number of channel widths required for exclusion band.

2: "A" stand for: the uplink/downlink speech output level shall be at least 35 dB less than the previously recorded reference levels, when measured through an audio band pass filter of width 200 Hz, centred on 1 kHz (audio breakthrough check). The RXQUAL of the downlink is not exceeding the value of three, measured during each individual exposure in the test sequence. Or During and after the test, the apparatus continue to operate as intended. No degradation of performance or loss of function is allowed below a permissible performance level.

EGPRS / GPRS / HSDPA / HSUPA Uplink and Downlink

Frequency Range (MHz)	RF Field Position	R.F. Field Strength	Azimuth	Observation	Perform. Criteria	Results
80~1000 1000-6000	H / V	3 V/m (rms) AM Modulated 1000Hz, 80%	Front	**CT,CR**	**A**	**P**
			Rear			
			Left			
			Right			

Note:

1. The exclusion band has not been tested in 80MHz~6GHz.
   For channelized equipment the exclusion band shall be calculated by using the following formulae:
   For the lower edge for the exclusion band:
   EXband(lower) = BandRX(lower) – nChWRX
   and for the upper edge of the exclusion band:
   EXband(upper) = BandRX(upper) + nChWRX
   Where n = number of channel widths required for exclusion band.

2. During the test, the Maximum Bit Error Ratio was less than 1×10^{-3}.
3. During the test, the Maximum Block Error Ratio was less than 1×10^{-2}.

BT / WIFI / NFC link

Frequency Range (MHz)	RF Field Position	R.F. Field Strength	Azimuth	Observation	Perform. Criteria	Results
80~1000 1000-6000	H / V	3 V/m (rms) AM Modulated 1000Hz, 80%	Front	**CT,CR**	**A**	**P**
			Rear			
			Left			
			Right			

Note:

1. The exclusion band has not been tested in 80MHz~6GHz.
   The exclusion band for immunity testing of equipment operating in the 2,4 GHz band shall be: • lower limit of exclusion band = lowest allocated band edge frequency -120 MHz, i.e. 2 280 MHz; • upper limit of exclusion band = highest allocated band edge frequency +120 MHz, i.e. 2 603,5MHz.

2. "A" stand for, during test, operate as intended no loss of function, no degradation of performance, no unintentional transmissions and after test, no degradation of performance, no loss of function, no loss of stored data or user programmable functions.

GPS Receiver Mode Link

Frequency Range (MHz)	RF Field Position	R.F. Field Strength	Azimuth	Observation	Perform. Criteria	Results
80~1000 1000-6000	H / V	3 V/m (rms) AM Modulated 1000Hz, 80%	Front	**CR**	**A**	**P**
			Rear			
			Left			
			Right			
80,104,136, 165,200,260, 330,430,560, 715 MHz ± 1, 920 MHz ± 1	H / V	3 V/m (rms) Unmodulated 200Hz, 100%	Front	**CR**	**A**	**P**
			Rear			
			Left			
			Right			

Note: "A" stand for, during test, operate as intended no loss of function, no degradation of performance, no unintentional transmissions and after test, no degradation of performance, no loss of function, no loss of stored data or user programmable functions.

REC / TF Playing /Data Transmission / FM Mode

Frequency Range (MHz)	RF Field Position	R.F. Field Strength	Azimuth	Perform. Criteria	Results
80~1000 1000~6000 1800 2600 3500 5000	H / V	3 V/m (rms) AM Modulated 1000Hz, 80%	Front	**A**	**P**
			Rear		
			Left		
			Right		

Note: "A" stand for, during test, operate as intended no loss of function, no degradation of performance, no unintentional transmissions and after test, no degradation of performance, no loss of function, no loss of stored data or user programmable functions.
There was not any unintentional transmission in standby mode.

3.5 EFT/BURST TESTING

3.5.1 TEST SPECIFICATION

Basic Standard:	IEC/EN 61000-4-4
Required Performance	B
Test Voltage:	Power Line: 1 kV DC/Signal/ wired network Line: 0.5 KV
Polarity:	Positive & Negative
Impulse Frequency:	For xDSL wired network ports: 100 kHz For DC/AC ports: 5 kHz
Impulse Wave shape :	5/50 ns
Burst Duration:	15 ms
Burst Period:	300 ms
Test Duration:	Not less than 1 min.

3.5.2 TEST PROCEDURE

The EUT and support equipment, are placed on a table that is 0.8 meter above a metal ground plane measured 1m*1m min. and 0.65mm thick min.

The other condition as following manner:

a. The length of power cord between the coupling device and the EUT should not exceed 1 meter.
b. Both positive and negative polarity discharges were applied.
c. The duration time of each test sequential was 1 minute
d. For the actual test configuration, please refer to the related Item –EUT Test Photos.

3.5.3 TEST SETUP

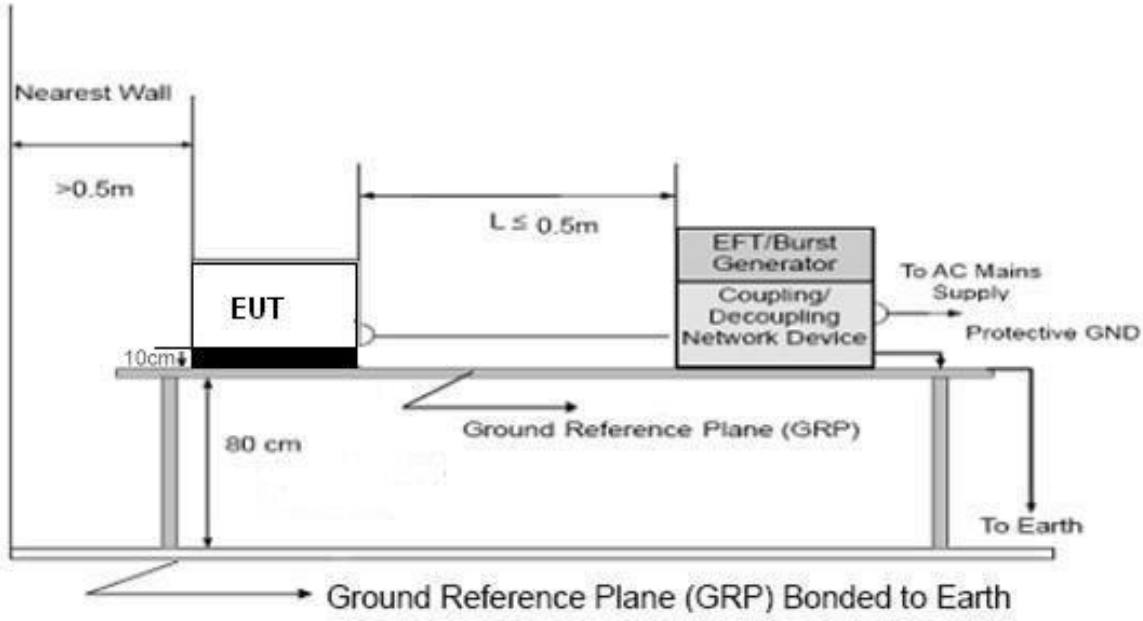

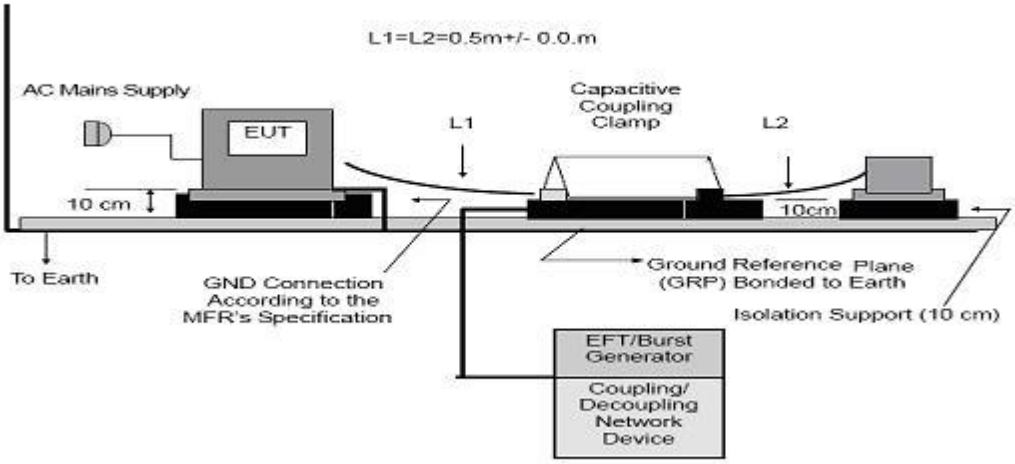

Note:

TABLE-TOP EQUIPMENT

The configuration consisted of a wooden table (0.8m high) standing on the Ground Reference Plane. The GRP consisted of a sheet of aluminum (at least 0.25mm thick and 2.5m square) connected to the protective grounding system. A minimum distance of 0.5m was provided between the EUT and the walls of the laboratory or any other metallic structure.

FLOOR-STANDING EQUIPMENT

The EUT installed in a representative system as described in section 7 of IEC/EN 61000-4-4 and its cables, were isolated from the Ground Reference Plane by an insulating support that is 0.1-meter thick. The GRP consisted of a sheet of aluminum (at least 0.25mm thick and 2.5m square) connected to the protective grounding system.

3.5.4 TEST RESULTS

EUT:	Mobile Phone	Model Name:	GQ3117
Temperature:	22℃	Relative Humidity:	53%
Pressure:	1010 hPa	Test Power:	DC 5V from Adapter AC 230V/50Hz
Test Mode:	Mode 1/2/4/5/6/7/8/9/10/11		

TEST RESULT

Mode 5/6/7/8/9/10/11

Coupling Line		Test level (kV)								BT / WIFI / GSM / WCDMA / LTE/ NFC Observation	GPS Observation	Criterion	Result
		0.5		1		2		4					
		+	-	+	-	+	-	+	-				
AC line	L	P	P	P	P					**TT,TR**	**TR**	**B**	**Complies**
	N	P	P	P	P								**Complies**
	PE												
	L+N	P	P	P	P								**Complies**
	L+PE												
	N+PE												
	L+N+PE												
DC Line													
Signal Line													

Mode 1/2/4

Coupling Line		Test level (kV)								Criterion	Result
		0.5		1		2		4			
		+	-	+	-	+	-	+	-		
AC line	L	P	P	P	P					B	**Complies**
	N	P	P	P	P						**Complies**
	PE										
	L+N	P	P	P	P						**Complies**
	L+PE										
	N+PE										
	L+N+PE										
DC Line											
Signal Line											

Note:

1)There was not any unintentional transmission in standby mode

2) In the table: 'P' represents 'PASS'; 'F' represents 'FAIL'.

3) There was not any unintentional transmission in standby mode.

3.6 SURGE TESTING

3.6.1 TEST SPECIFICATION

Basic Standard:	IEC/EN 61000-4-5
Required Performance	B
Wave-Shape:	Combination Wave 1.2 / 50 us Open Circuit Voltage 8 / 20 us Short Circuit Current
Test Voltage:	Power Line:0.5 kV, 1 kV, 2 kV
Surge Input / Output:	L-N, L-PE, N-PE
Generator Source:	2 ohm between networks
Impedance:	12 ohm between network and ground
Polarity:	Positive / Negative
Phase Angle:	0 / 90 / 180 / 270
Pulse Repetition Rate:	1 time / min. (maximum)
Number of Tests:	5 positive and 5 negative at selected points

3.6.2 TEST PROCEDURE

a. For EUT power supply:
The surge is to be applied to the EUT power supply terminals via the capacitive coupling network. Decoupling networks are required in order to avoid possible adverse effects on equipment not under test that may be powered by the same lines, and to provide sufficient decoupling impedance to the surge wave. The power cord between the EUT and the coupling/decoupling networks shall be 2meters in length (or shorter).

b. For test applied to unshielded unsymmetrically operated interconnection lines of EUT:
The surge is applied to the lines via the capacitive coupling. The coupling /decoupling networks shall not influence the specified functional conditions of the EUT. The interconnection line between the EUT and the coupling/decoupling networks shall be 2 meters in length (or shorter).

c. For test applied to unshielded symmetrically operated interconnection /telecommunication lines of EUT:
The surge is applied to the lines via gas arrestors coupling. Test levels below the ignition point of the coupling arrestor cannot be specified. The interconnection line between the EUT and the coupling/decoupling networks shall be 2 meters in length (or shorter).

d. For the actual test configuration, please refer to the related Item –EUT Test Photos.

3.6.3 TEST SETUP

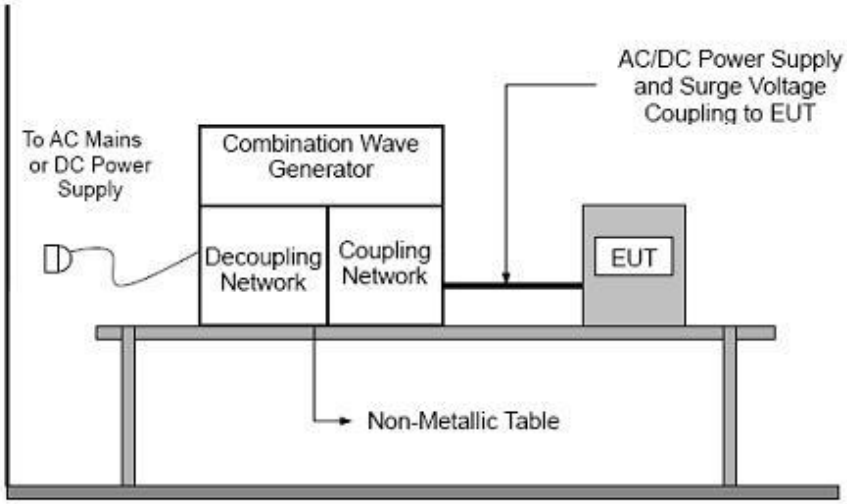

3.6.4 TEST RESULTS

EUT:	Mobile Phone	Model Name:	GQ3117
Temperature:	22℃	Relative Humidity:	53%
Pressure:	1010 hPa	Test Power:	DC 5V from Adapter AC 230V/50Hz
Test Mode:	Mode 1/2/4/5/6/7/8/9/10/11		

TEST RESULT

Mode 5/6/7/8/9/10/11

Coupling Line			Test level								BT / WIFI / GSM / WCDMA / LTE / NFC Observation	GPS Observation	Criterion	Result
			0.5kV		1kV		2kV		4kV					
			+	-	+	-	+	-	+	-				
AC line	L-N	0°	P	P	P	P					**TT,TR**	**TR**	**B**	**Complies**
		90°	P	P	P	P								
		180°	P	P	P	P								
		270°	P	P	P	P								
	L-PE													
	N-PE													
DC Line														
Signal Line														

Mode 1/2/4

Coupling Line			Test level								Criterion	Result
			0.5 kV		1 kV		2 kV		4 kV			
			+	-	+	-	+	-	+	-		
AC line	L-N	0°	P	P	P	P					B	**Complies**
		90°	P	P	P	P						
		180°	P	P	P	P						
		270°	P	P	P	P						
	L-PE											
	N-PE											
DC Line												
Signal Line												

Note:

1) There was not any unintentional transmission in standby mode
2) In the table: 'P' represents 'PASS'; 'F' represents 'FAIL'.
3) There was not any unintentional transmission in standby mode.

3.7 INJECTION CURRENT TESTING

3.7.1 TEST SPECIFICATION

Basic Standard:	IEC/EN 61000-4-6
Required Performance	A
Frequency Range:	0.15 MHz - 80 MHz
Field Strength:	3 Vr.m.s.
Modulation:	1kHz Sine Wave, 80%, AM Modulation
Frequency Step:	1 % of fundamental
Dwell Time:	at least 3 seconds

3.7.2 TEST PROCEDURE

The EUT and support equipment, are placed on a table that is 0.8 meter above a metal ground plane measured 1m*1m min. and 0.65mm thick min.

The other condition as following manner:

a. The field strength level was 3V.

b. The frequency range is swept from 150 KHz to 80 MHz, with the signal 80%amplitude modulated with a 1kHz sine wave. The rate of sweep did not exceed 1.5 x 10^{-3} decade/s. Where the frequency range is swept incrementally, the step size was 1% of fundamental.

c. The dwell time at each frequency shall be not less than the time necessary for the EUT to be able to respond.

d. For the actual test configuration, please refer to the related Item –EUT Test Photos.

3.7.3 TEST SETUP

☒ Mobile Communication

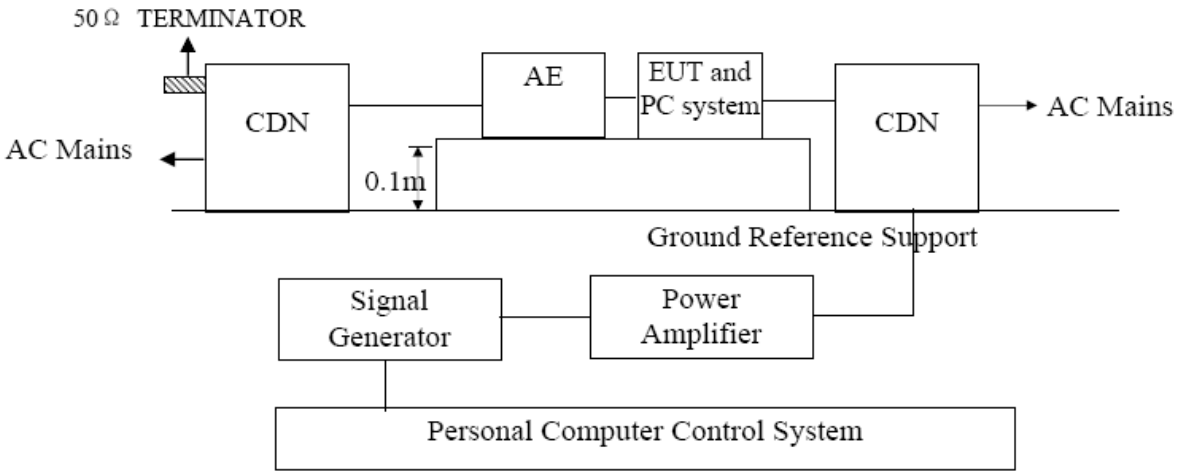

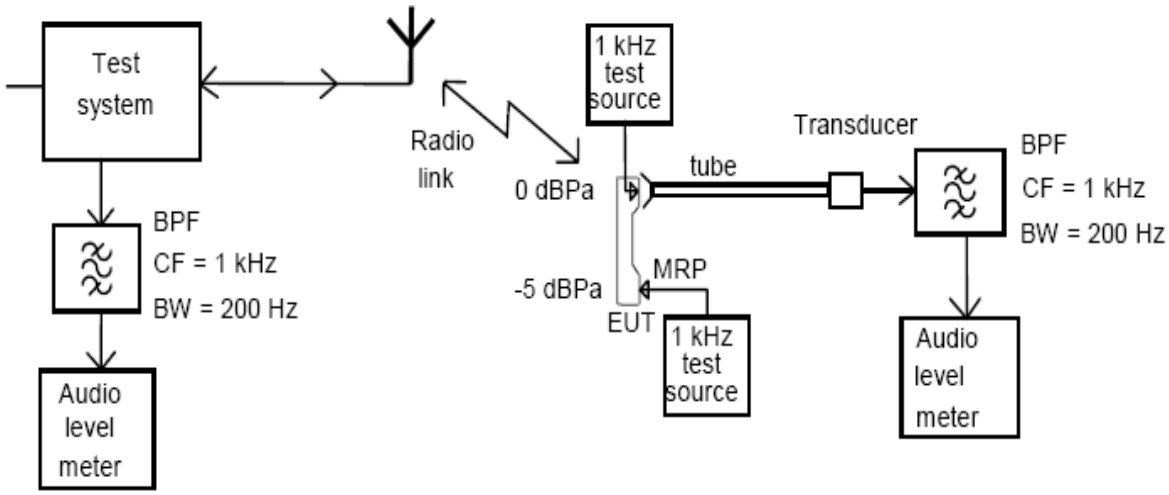

☒ General Communication

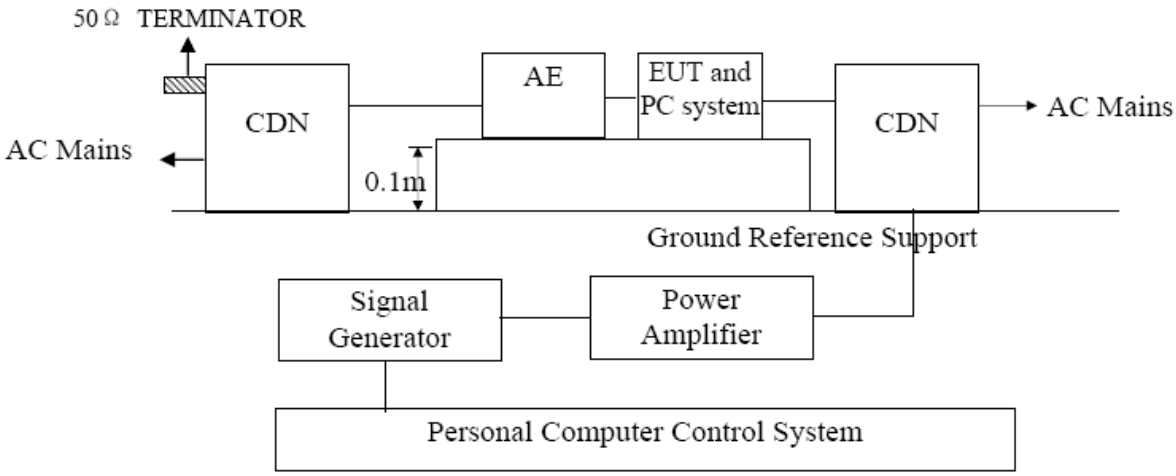

For the actual test configuration, please refer to the related Item –EUT Test Photos.

NOTE:

FLOOR-STANDING EQUIPMENT

The equipment to be tested is placed on an insulating support of 0.1 meters height above a ground reference plane. All relevant cables shall be provided with the appropriate coupling and decoupling devices at a distance between 0.1 meters and 0.3 meters from the projected geometry of the EUT on the ground reference plane.

3.7.4 TEST RESULTS

EUT:	Mobile Phone	Model Name:	GQ3117
Temperature:	22℃	Relative Humidity:	53%
Pressure:	1010 hPa	Test Power:	DC 5V from Adapter AC 230V/50Hz
Test Mode:	Mode1/2/4/5/6/7/8/9/10/11		

TEST RESULT

LTE FDD B1 / B3 / B7 / B8 / B20 / B28 / B40 Link

Test Ports (Mode)	Freq. Range (MHz)	Field Strength	Observation	Results
Input / Output AC. Power Port	0.15 ---80	3V(rms) AM Modulated 1000Hz, 80%	**CT, CR**	**P**
Input / Output DC. Power Port	0.15 --- 80		**N/A**	**N/A**
Signal Line	0.15 --- 80		**N/A**	**N/A**

Note: In the data transfer mode, the performance criteria shall be that the throughput shall be ⩾ 95 % of the maximum throughput of the reference measurement channel

GSM 900 / 1800 / WCDMA 2100 / 900 Uplink and Downlink

Test Ports (Mode)	Freq. Range (MHz)	Field Strength	Observation	Perform. Criteria	Results
Input / Output AC. Power Port	0.15 ---80	3V(rms) AM Modulated 1000Hz, 80%	**CT, CR**	**A**	**P**
Input / Output DC. Power Port	0.15 --- 80		**N/A**	**N/A**	**N/A**
Signal Line	0.15 --- 80		**N/A**	**N/A**	**N/A**

EUT is used for this calibration, the output of the audio source was adjusted to achieve a reference Level equivalent to a SPL of –5 dB Pa at 1 kHz at the Mouth Reference Point (MRP), the reading of the audio level meter, which was connected to the output of the communication tester, was recorded as a reference level. During the test, the uplink speech output level was monitored, it was confirmed to be at least 35 dB less than the previously- recorded reference level.

EGPRS / GPRS / HSDPA / HSUPA Uplink and Downlink

Test Ports (Mode)	Freq. Range (MHz)	Field Strength	Observation	Perform. Criteria	Results
Input / Output AC. Power Port	0.15 ---80	3V(rms) AM Modulated 1000Hz, 80%	**CT, CR**	**A**	**P**
Input / Output DC. Power Port	0.15 --- 80		**N/A**	**N/A**	**N/A**
Signal Line	0.15 --- 80		**N/A**	**N/A**	**N/A**

Note: During the test, the Maximum Bit Error Ratio was less than 1×10^{-3}.
During the test, the Maximum Block Error Ratio was less than 1×10^{-2}.

BT / WIFI/ NFC link

Test Ports (Mode)	Freq. Range (MHz)	Field Strength	Observation	Perform. Criteria	Results
Input / Output AC. Power Port	0.15 ---80	3V(rms) AM Modulated 1000Hz, 80%	**CT, CR**	**A**	**P**
Input / Output DC. Power Port	0.15 --- 80		**N/A**	**N/A**	**N/A**
Signal Line	0.15 --- 80		**N/A**	**N/A**	**N/A**

Note: "A" stand for, during test, operate as intended no loss of function, no degradation of performance, no unintentional transmissions and after test, no degradation of performance, no loss of function, no loss of stored data or user programmable functions.

GPS Receiver Mode Link

Test Ports (Mode)	Freq. Range (MHz)	Field Strength	Perform. Criteria	Results
Input / Output AC. Power Port	0.15 --- 80	3V(rms) AM Modulated 1000Hz, 80%	**A**	**P**
Input / Output DC. Power Port	0.15 --- 80		**N/A**	**N/A**
Signal Line	0.15 --- 80		**N/A**	**N/A**

Note: "A" stand for, during test, operate as intended no loss of function, no degradation of performance, no unintentional transmissions and after test, no degradation of performance, no loss of function, no loss of stored data or user programmable functions.

REC / TF Playing / FM Mode

Test Ports (Mode)	Freq. Range (MHz)	Field Strength	Perform. Criteria	Results
Input / Output AC. Power Port	0.15 ---80	3V(rms) AM Modulated 1000Hz, 80%	A	P
Input / Output DC. Power Port	0.15 --- 80		N/A	N/A
Signal Line	0.15 --- 80		N/A	N/A

Note: "A" stand for, during test, operate as intended no loss of function, no degradation of performance, no unintentional transmissions and after test, no degradation of performance, no loss of function, no loss of stored data or user programmable functions.

Note:

1)There was not any unintentional transmission in standby mode
2) In the table: 'P' represents 'PASS'; 'F' represents 'FAIL'.
3) There was not any unintentional transmission in standby mode.

4.8 VOLTAGE INTERRUPTION/DIPS TESTING

4.8.1 TEST SPECIFICATION

Basic Standard:	IEC/EN 61000-4-11
Required Performance	100% reduction, 0.5 Cycle 100% reduction, 1.0 Cycle 30% reduction, 25 Cycles 30% reduction, 0.5 Cycle
Voltage Interruptions:	100% reduction, 250 Cycles
Test Duration Time:	Minimum three test events in sequence
Interval between Event:	Minimum ten seconds
Phase Angle:	0°/45°/90°/135°/180°/225°/270°/315°/360°
Test Cycle:	3 times

4.8.2 TEST PROCEDURE

The EUT shall be tested for each selected combination of test levels and duration with a sequence of three dips/interruptions with intervals of 10 s minimum (between each test event). Each representative mode of operation shall be tested. Abrupt changes in supply voltage shall occur at zero crossings of the voltage waveform.

4.8.3 TEST SETUP

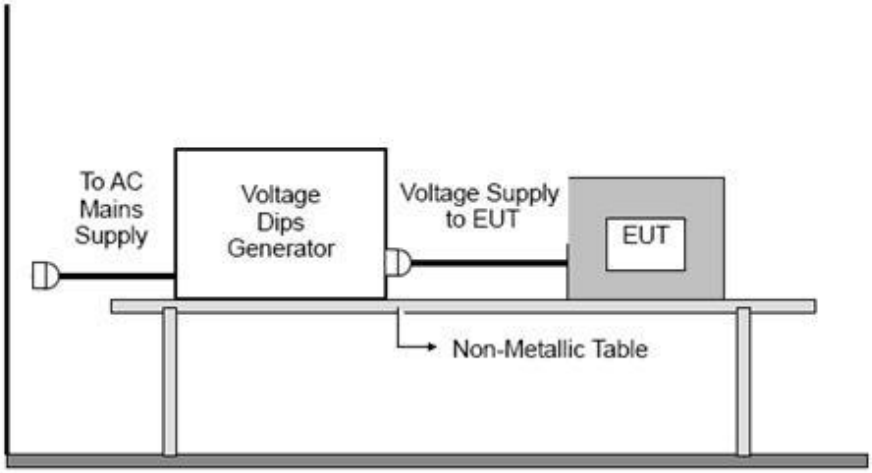

For the actual test configuration, please refer to the related Item –EUT Test Photos.

4.8.4 TEST RESULTS

EUT:	Mobile Phone	Model Name:	GQ3117
Temperature:	22℃	Relative Humidity:	53%
Pressure:	1010 hPa	Test Power:	DC 5V from Adapter AC 230V/50Hz
Test Mode:	Mode 1/2/4/5/6/7/8/9/10/11		

TEST RESULT

Mode 5/6/7/8/9/10/11

Voltage Reduction	Duration (ms)	BT / WIFI / GSM / WCDMA / LTE/ NFC Observation	GPS Observation	Perform Criteria	Results
Voltage dip: 0%	10	**TT, TR**	**TR**	**B**	**P**
Voltage dip: 0%	20	**TT, TR**	**TR**	**B**	**P**
Voltage dip: 70%	10	**TT, TR**	**TR**	**C**	**P**
Voltage dip: 70%	500	**TT, TR**	**TR**	**C**	**P**
Voltage interruptions: 0%	5000	**TT, TR**	**TR**	**C**	**P**

Mode 1/2/4

Voltage Reduction	Duration (ms)	Perform Criteria	Results
Voltage dip: 0%	10	**B**	**P**
Voltage dip: 0%	20	**B**	**P**
Voltage dip: 70%	10	**C**	**P**
Voltage dip: 70%	500	**C**	**P**
Voltage interruptions: 0%	5000	**C**	**P**

Note:

1) There was not any unintentional transmission in standby mode
2) In the table: 'P' represents 'PASS'; 'F' represents 'FAIL'.
3) There was not any unintentional transmission in standby mode.

4. EUT TEST PHOTO

Radiated Measurement Photo

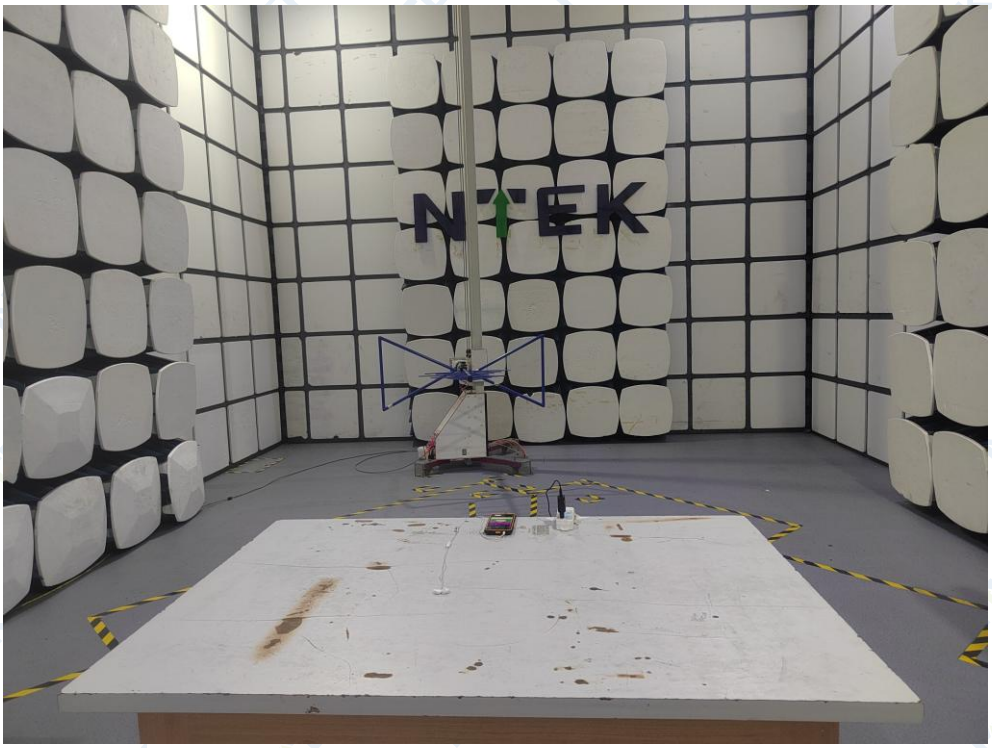

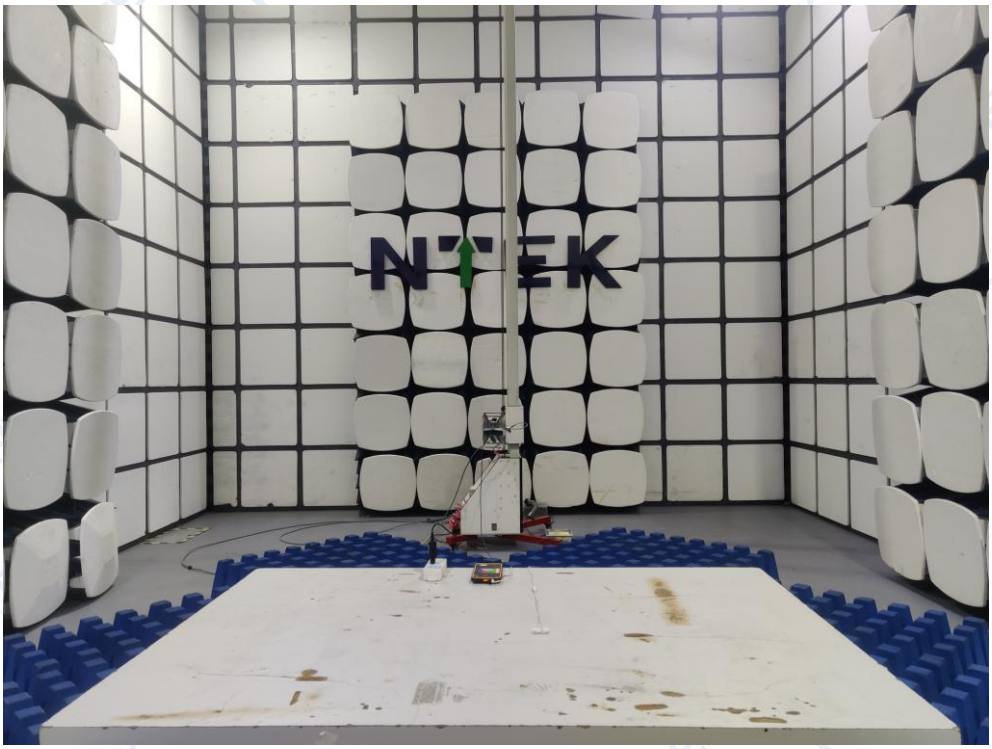

Conducted Measurement Photo

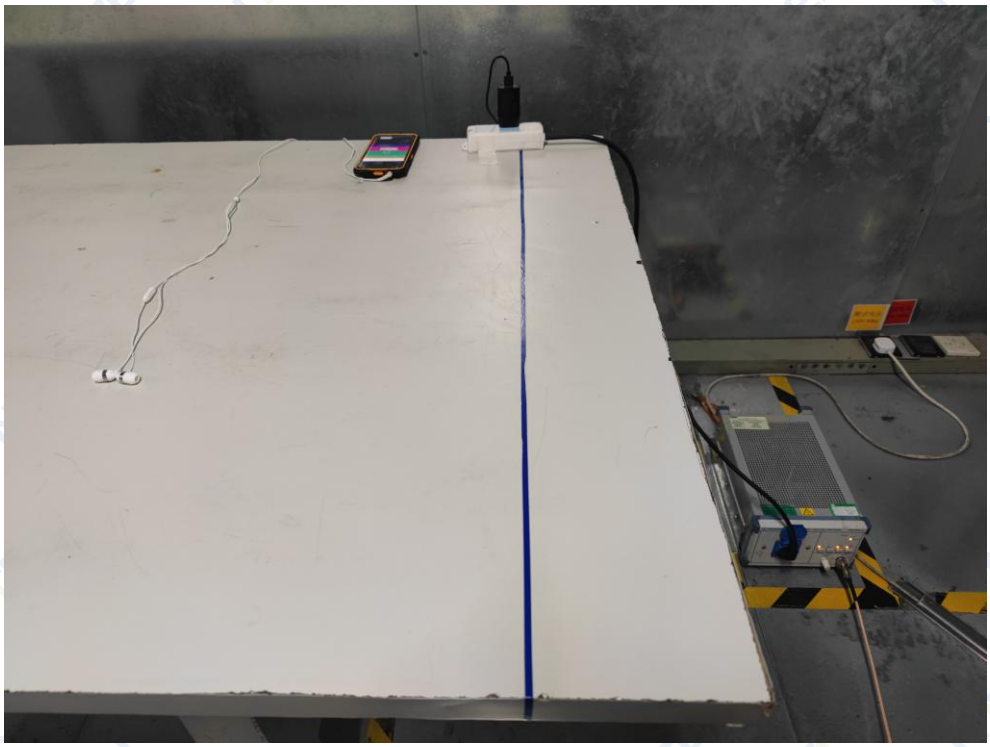

MS Measurement Photo

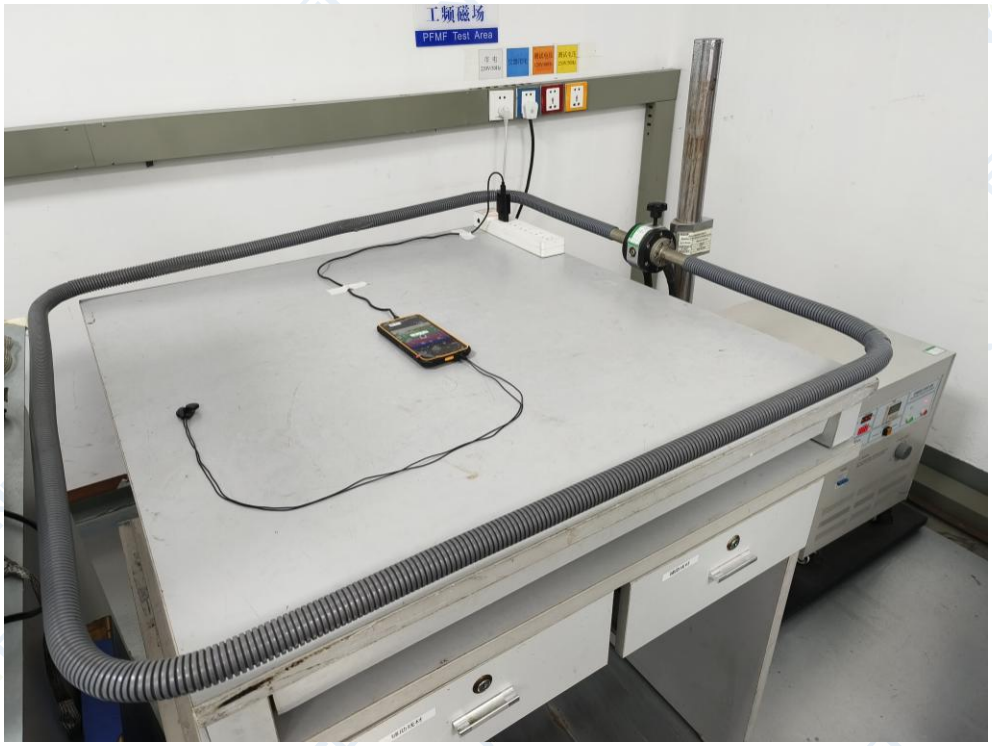

ESD Measurement Photo

RS Measurement Photo

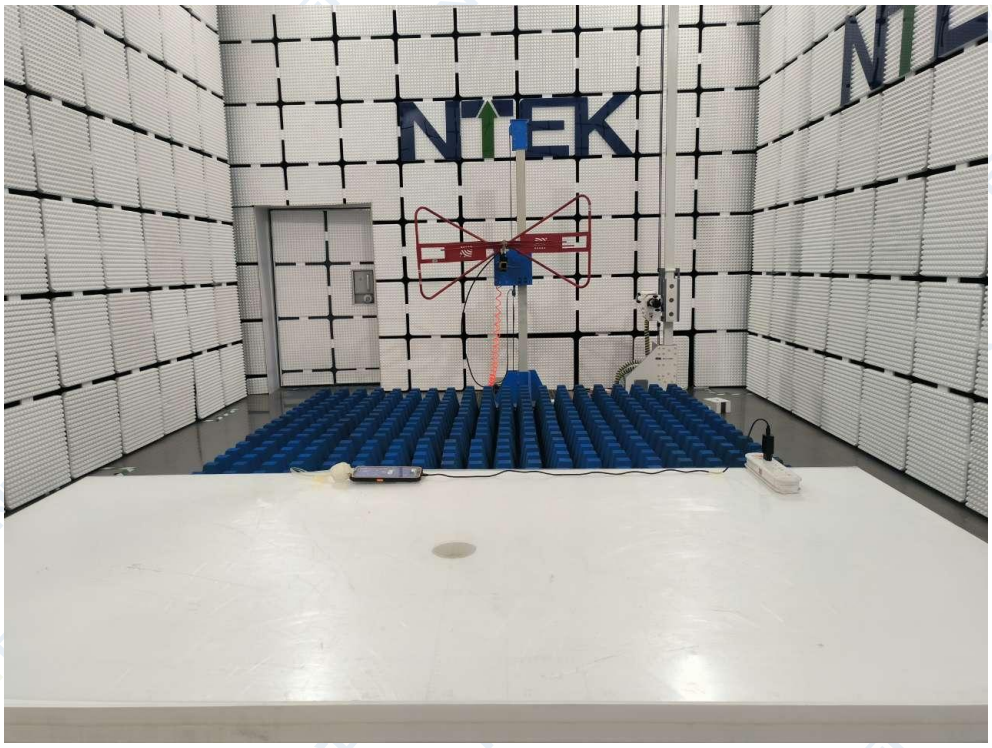

EFT Measurement Photo

SURGE Measurement Photo

DIP Measurement Photo

CS Measurement Photo

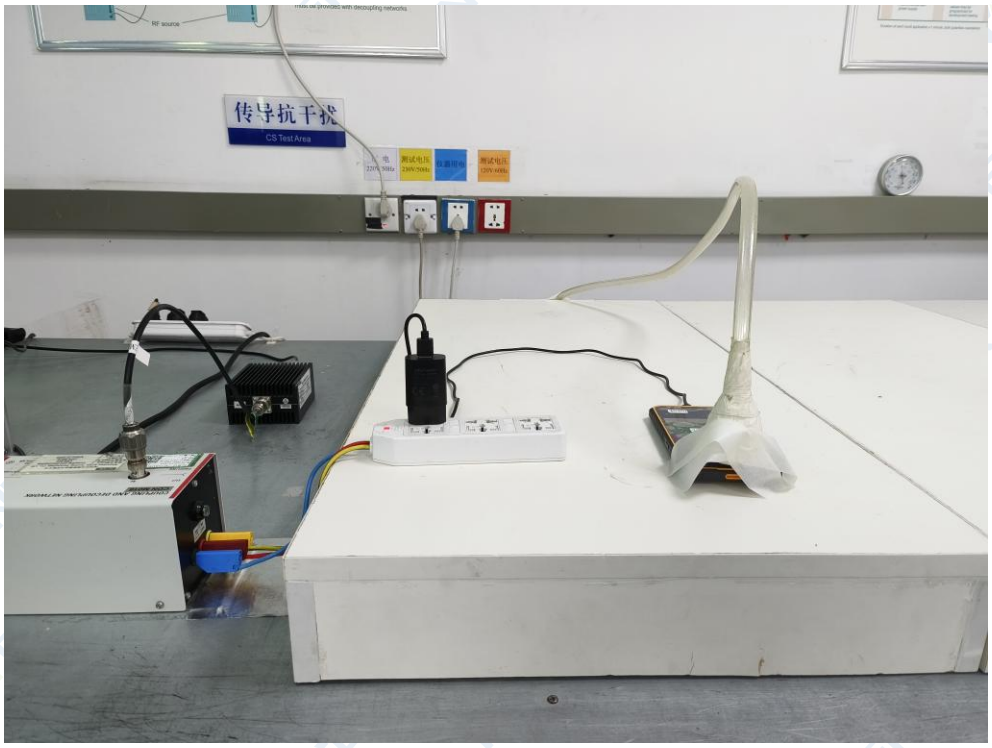

END OF REPORT